Model Number System

PVQ10 and PVQ13

1	2	3	4	5	6	7	8	9	10	11	12	13	14	15	16	17	18	19	20	21	22	23	24	25	26	27	28
P	V	Q	1	0	A	2	R	S	E	1	S	2	0	C	*	2	1	V	*	1	1	B	D	1	2	S	*

Nos	Feature	Code	Description
1,2,3	Series PVQ	P V Q	Inline piston pump Variable volume Quiet series
4,5	Displacement in cc/rev and pressure ratings	10 13	10,5 cc/rev (0.64 cir), 210 bar (3000 psi) 13,8 cc/rev (0.84 cir), 140 bar (2000 psi)
6,7	Mounting flange specifications	A2 MA	Flange SAE J744 82-2 (SAE A) Flange ISO 3019/2-80A2HW (available with "N" drive shaft only)
8	Rotation viewed from shaft end	R L	Right hand (cw), standard Left hand (ccw), optional
9,10	Ports, type and location	SE SS	SAE O-ring rear port, 1.0625" inlet and outlet (standard) SAE O-ring side port, 1.3125" inlet and outlet (optional)
11	Shafts, input	1 3 N	Straight keyed SAE "A" modified, .75" dia. x 1.75" long Splined SAE "A" modified, 9T 16/32 DP major dia. fit Shaft end ISO 3019/2 E20N (available with "MA" mount only)
12	Seals	S F	Buna N, standard Fluorocarbon, optional
13,14	Pump design number	20	Design number subject to change. Installation dimensions remain unchanged for designs 10-19.
15,16	Control type	C**	Pressure compensator. PVQ10: Standard model is C21, indicating setting of 210 bar (3000 psi); range is 02-21 in tens of bar (350-3000 psi). PVQ13: Standard model is C14, indicating factory setting of 138 bar (2000 psi); range is 02-14 in tens of bar (350-2000 psi).
		CM**	Low pressure compensator. Standard model is CM7, indicating factory setting of 69 bar (1000 psi); range is 02-10 in tens of bar (350-1500 psi).

Nos	Feature	Code	Description
15,16	Control type	C**V**B	Pressure compensator C**, as above with load-sensing. Standard load-sensing setting is 11 bar (160 psi); range 10-17 bar (150-250 psi); with bleed-down orifice. Example: C21V11B indicates PVQ10 compensator with 210 bar pressure setting and 11 bar load-sense differential.
		C**V**P	Pressure compensator with load-sensing as C**V**B above, but with bleed-down orifice plugged.
		C**VC**B	Pressure compensator with load-sensing. Compensator same as C** above. Standard load-sensing setting is 24 bar (350 psi), range 17-31 bar (250-450 psi). With bleed-down orifice.
		C**VC**P	Pressure compensator with load-sensing. Same as C**VC**B above, but with bleed-down orifice plugged.
		CG	Pressure compensator modified for hydraulic remote control.
		CD**	Electric dual range compensator. PVQ10: CD21 is standard 210 bar setting of high range (24-210 bar). PVQ13: CD14 is standard 140 bar setting of high range (24-140 bar). Both units require low range to be set by customer (20-100 bar).
		UV	Unloading Valve for accumulator circuits. See installation details.

1	2	3	4	5	6	7	8	9	10	11	12	13	14	15	16	17	18	19	20	21	22	23	24	25	26	27	28
P	V	Q	1	0	A	2	R	S	E	1	S	2	0	C	*	2	1	V	*	1	1	B	D	1	2	S	*

Nos	Feature	Code	Description
17,18	Pressure setting	21	210 bar (3000 psi) PVQ10
		14	140 bar (2000 psi) PVQ13
19,20	Flow control option	Blank	No flow control
		V	
		VC	
21,22	Load sense differential pressure setting	Blank	No flow control
		11	
		24	
23	Flow control option	Blank	No flow control
		B	
		P	
24	Displacement option	Blank	Without adjustable maximum displacement stop (standard).
		D	Adjustable maximum displacement stop (optional).
25,26	Control design	12	O-ring seal design
27,28	Special pump option suffixes	S2	Shaft up mounting
		S3	British Standard Parallel Threads Counterbore Ports (ISO R288 threads). Contact for available configurations.
		S9	Special CG compensator for use with electronically modulated relief valves.

RATINGS

Model Number System	Maximum Geometric Displacement cm^3/r (in^3/r)	Rated Speed r/min	Maximum Pressure bar (psi)	Input Power at Max. Pressure and Rated Speed kW (hp)	Approx. Weight kg (lb)
PVQ10	10,5 (0.643)	1800	210 (3000)	7,4 (10)	7,2 (16)
PVQ13	13,8 (0.843)	1800	140 (2000)	6,5 (8.75)	7,2 (16)

Pressure Limits:

Case pressure – 0,35 bar (5 psig) maximum
Inlet pressure – 0,2 bar (5 in. Hg) vacuum to 2 bar (30 psig)

Installation Dimensions

PVQ10 and PVQ13 with Rear Ports

Millimeters (inches)

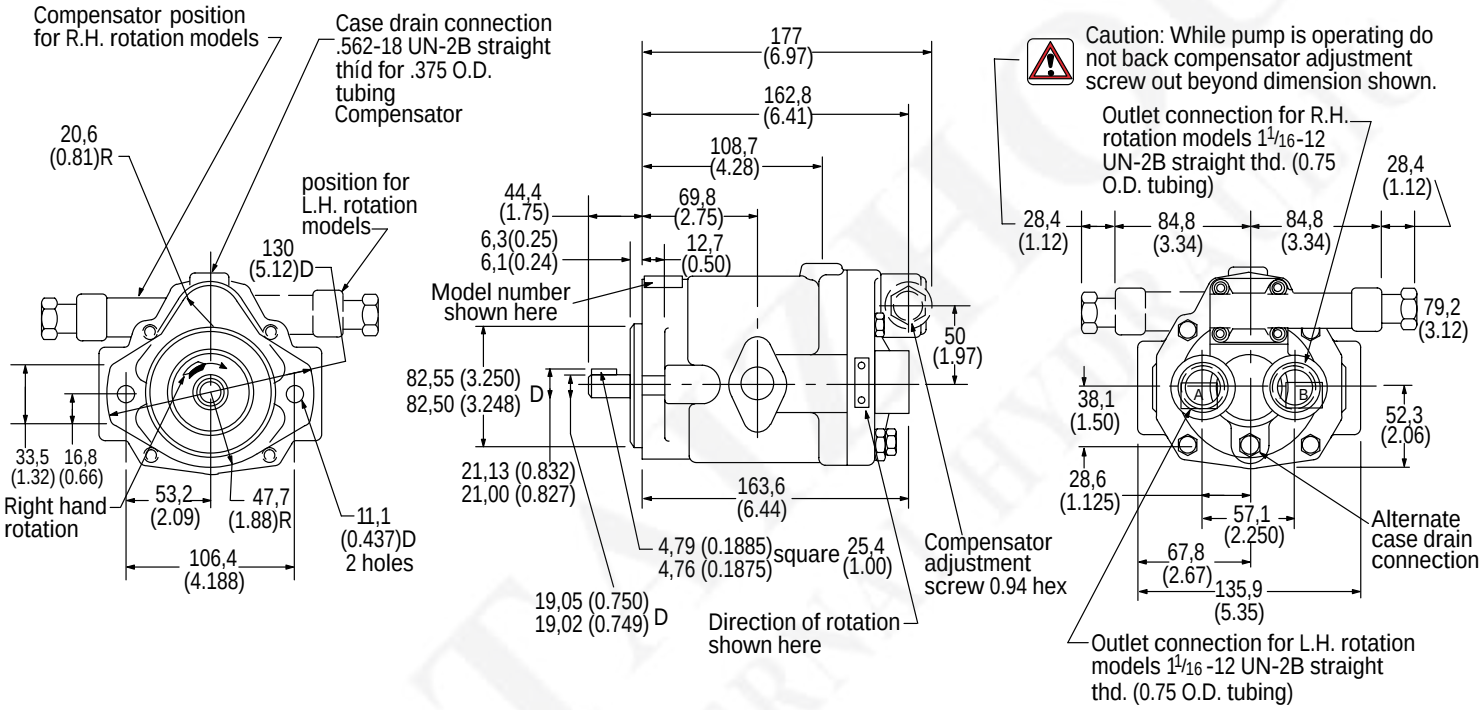

PVQ10 and PVQ13 with Side Ports

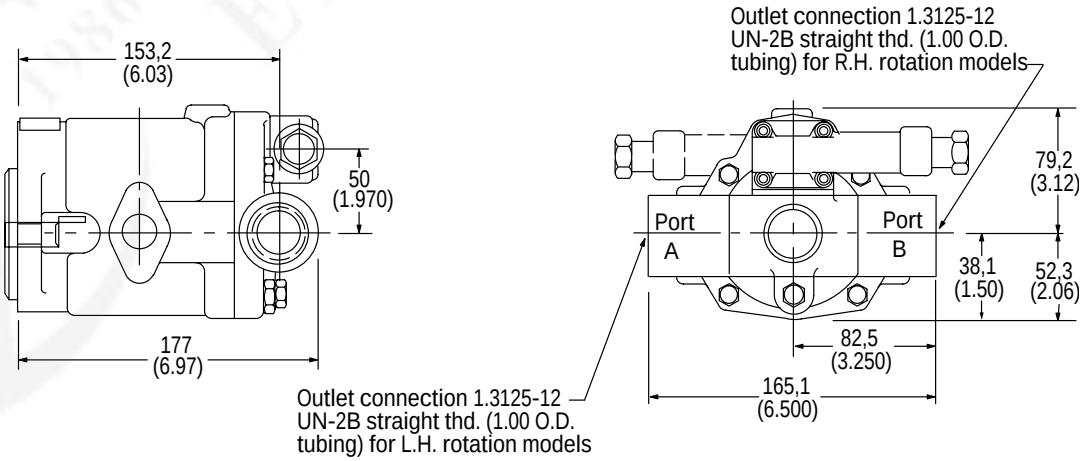

Shaft Options

No. 3 Shaft

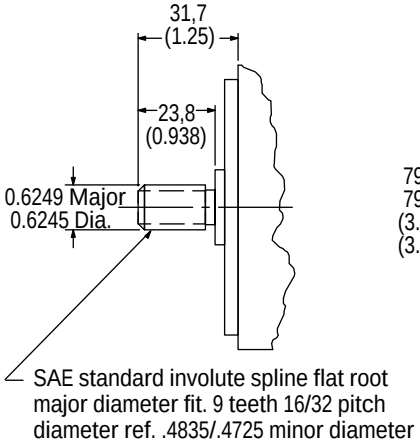

"N" Shaft with "MA" Flange

(Flange and shaft end ISO 3019/2-80A2HW-E20N)

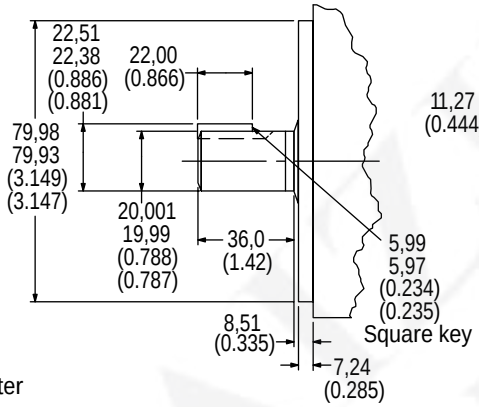

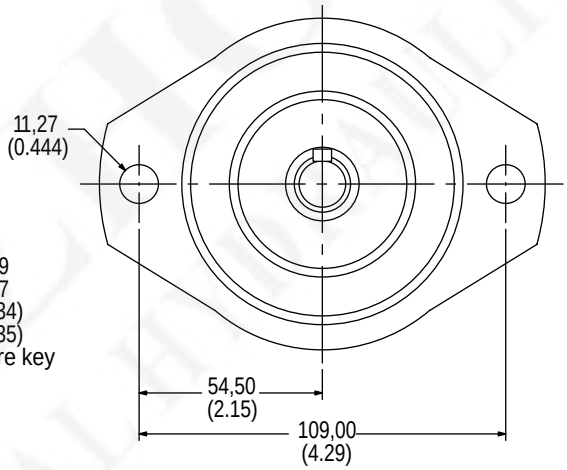

Controls

Remote Compensator

Adjustment

1. Turn pressure control (such as C-175) CCW to minimum setting.
2. Turn compensator adjustment plug to desired minimum pressure (17 bar, 250 psi or higher).
3. Full pressure range can now be obtained with pressure control.

Caution: Effective compensator pressure will be compensator control setting (17-69 bar, 250-1000 psig) plus remote relief valve setting.

Load-sensing with Pressure Limiting Compensator

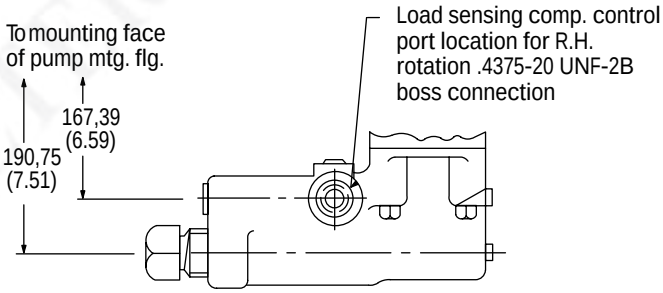

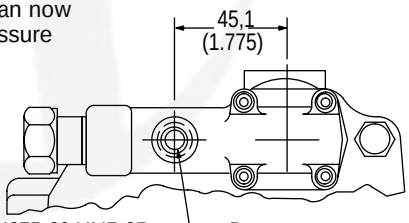

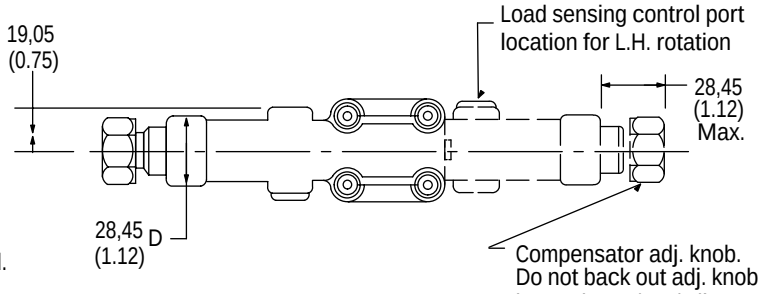

.4375-20 UNF-2B thread for "CG" control models. Connect to pressure control, such as C-175. SAE O-ring boss connection .250 O.D. tubing

Do not operate pump with this port plugged.

Compensator adj. knob. Do not back out adj. knob beyond 28,4 (1.12) dim. shown while pump is operating.

No. 3 Shaft

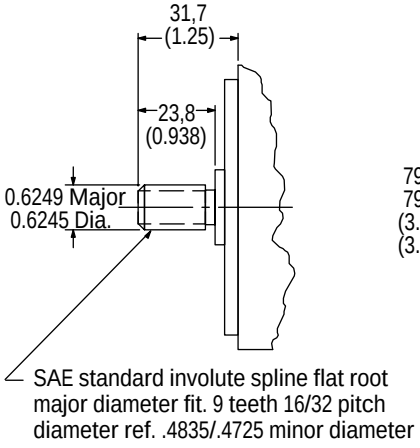

"N" Shaft with "MA" Flange

(Flange and shaft end ISO 3019/2-80A2HW-E20N)

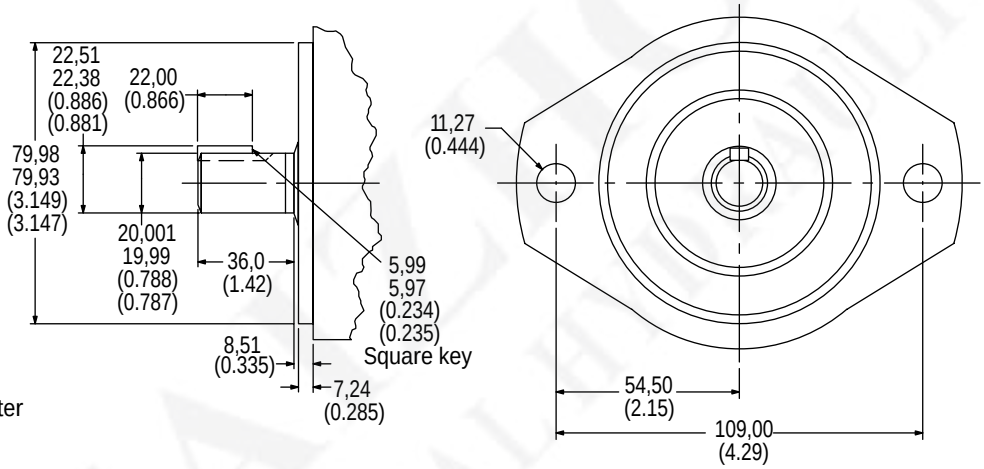

Controls

Remote Compensator

Adjustment

1. Turn pressure control (such as C-175) CCW to minimum setting.
2. Turn compensator adjustment plug to desired minimum pressure (17 bar, 250 psi or higher).
3. Full pressure range can now be obtained with pressure control.

Caution: Effective compensator pressure will be compensator control setting (17-69 bar, 250-1000 psig) plus remote relief valve setting.

Load-sensing with Pressure Limiting Compensator

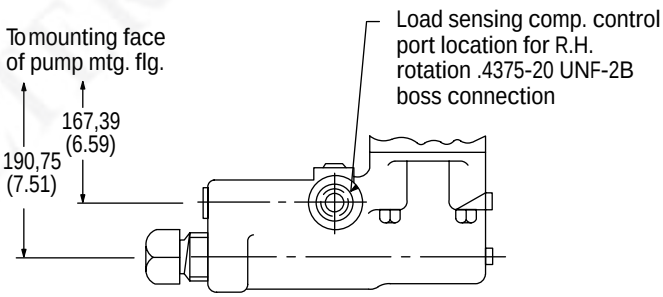

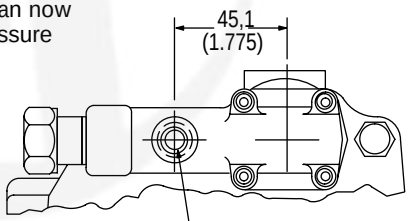

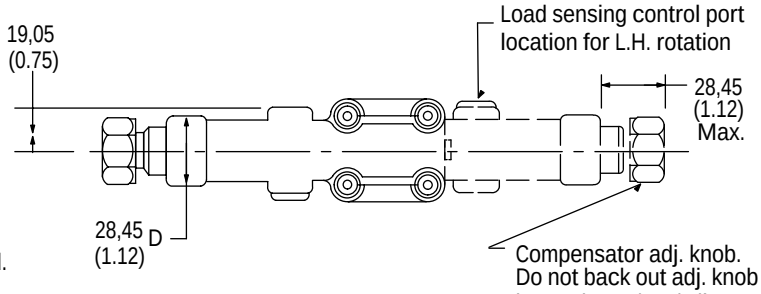

.4375-20 UNF-2B thread for "CG" control models. Connect to pressure control, such as C-175. SAE O-ring boss connection .250 O.D. tubing

Do not operate pump with this port plugged.

Compensator adj. knob. Do not back out adj. knob beyond 28,4 (1.12) dim. shown while pump is operating.

Controls
Electric Dual Range Pressure Compensator Control

Adjustment

1. With the directional valve de-energized, loosen locknut "5" and turn the adjusting screw "4" to the desired first stage pressure setting, then tighten locknut "5."
2. With solenoid de-energized, turn adjusting spool "1" counterclockwise (CCW) until nut "3" is bottomed in adjusting screw slot. (Second stage setting is now equal to first stage pressure setting.) Turn adjusting spool clockwise (CW) to desired second stage pressure requirements. One complete turn of adjusting spool equals approximately 41 bar (600 psi). Energize solenoid and check pressure setting. De-energize solenoid and re-adjust if necessary. Secure this setting by tightening locknut "2."

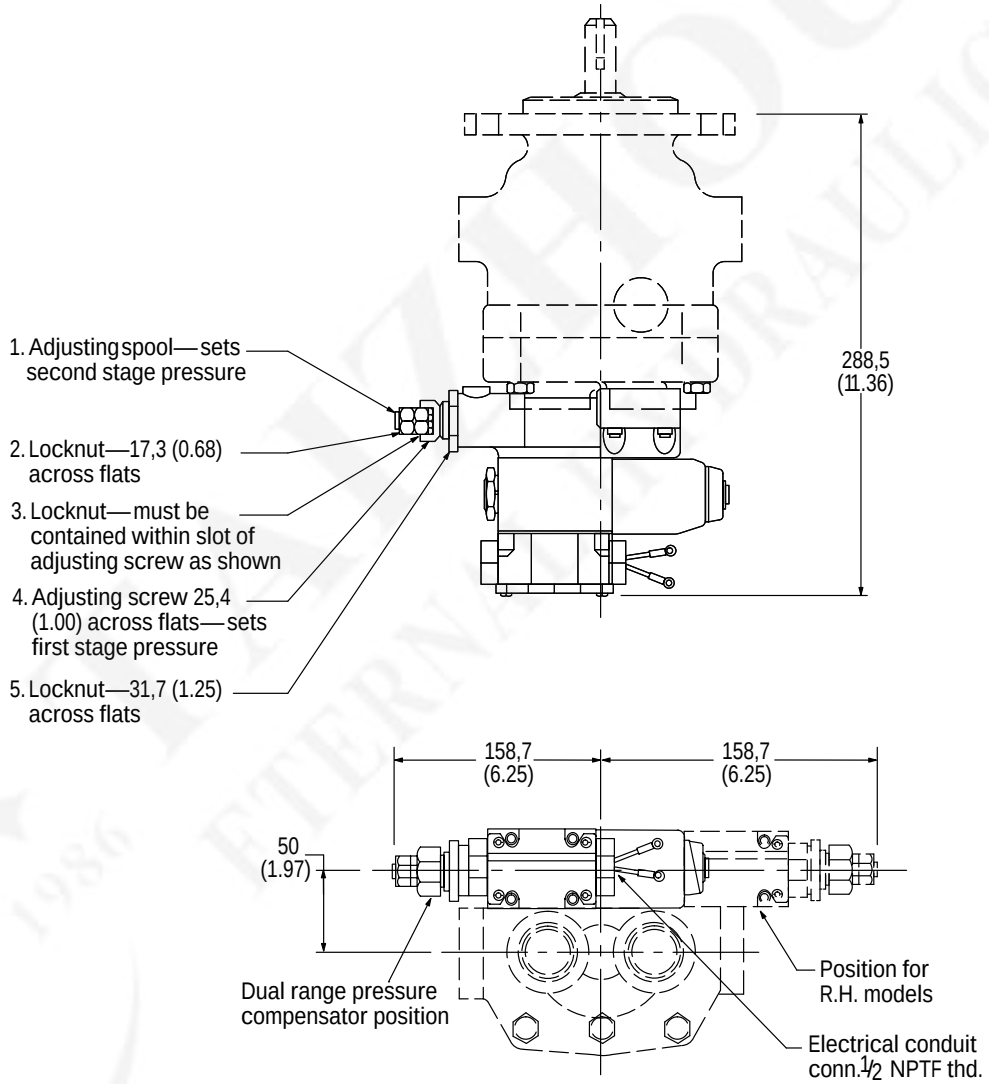

Solenoid Data (110V AC 50 Hz and 115/120V AC 60 Hz)

Solenoid current	Inrush amps (R.M.S.)	Holding amps
115/120V AC 60 Hz -	2.0	.54
110V AC 50 Hz		.64*

*Maximum peak inrush amps approximately 1.4 x R.M.S. value shown.

Refer to catalog GB-C-2015B for additional solenoid valve data.

Controls

Electric Dual Range Pressure Compensator with Maximum Displacement Stop

Maximum Flow Adjustment

With the system pressure below both compensator settings, loosen maximum stop adjusting screw locknut and adjust screw to desired flow position (turning screw clockwise decreases flow and turning screw counterclockwise increases flow). To lock screw in position tighten locknut. To assist initial priming, adjust control setting to at least 40% of maximum flow position.

Compensator Control

1. With the directional valve de-energized, loosen locknut "5" and turn the adjusting screw "4" to the desired first stage pressure setting, then tighten locknut "5".
2. With directional valve de-energized, turn adjusting spool "1" counterclockwise until nut "3" is bottomed in adjusting screw slot. (Second stage setting is now equal to first stage pressure setting.) Turn adjusting spool clockwise to desired second stage pressure requirements. One complete turn of adjusting spool equals approximately 41 bar (600 psi). Energize solenoid and check pressure setting. De-energize solenoid and re-adjust if necessary. Secure this setting by tightening locknut "2".

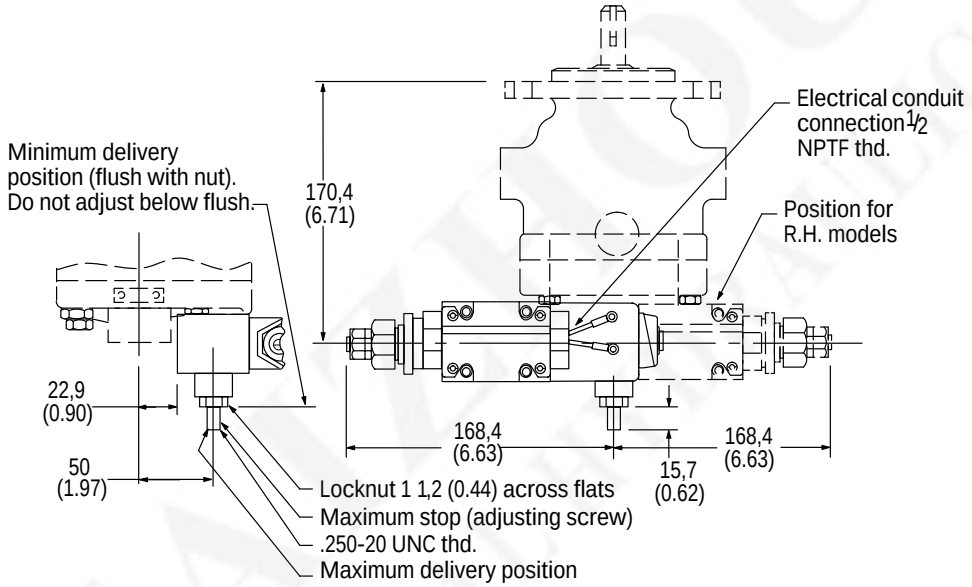

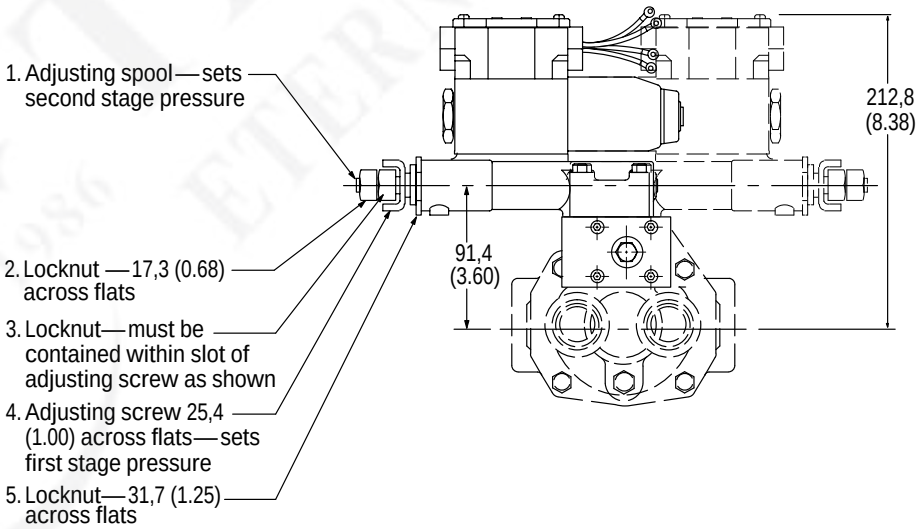

Controls
Unloading Valve Control

With the unloading valve control the variable pump will unload at a preset pressure. The pump will maintain this no flow, low pressure (approximately 14 bar [200 psi]) standby condition, until system pressure drops to about 85% of the preset unloading pressure. The pump will then return on stroke and provide full flow until the preset unloading pressure is reached again.

With this control, an efficient accumulator charging circuit is obtained. The pump will provide full flow to fill the accumulator until the maximum charging pressure is reached. The pump then goes to a standby condition until the accumulator pressure drops to 85% of the desired maximum. The accumulator is then recharged as the cycle starts over again.

A separate right angle check valve must be provided to maintain the accumulator hydraulic charge and prevent back flow when the pump is unloaded. The check valve's internal leakage must not exceed five drops per minute. The control port must be connected to system pressure, downstream of the check valve.

Adjustment range

PVQ10	100-210 bar (1500-3000 psi)
PVQ13	100-140 bar (1500-2000 psi)

Cut-in pressure is 85% of unloading pressure, minimum.

Setting Pressures

1. Back out accumulator unloading pressure adjustment screw to below desired unloading pressure.
2. Adjust desired standby pressure.
3. Set accumulator pressure by screwing in the accumulator unloading adjustment screw. Accumulator recharge (cut-in) pressure is a function of the maximum accumulator pressure and is not adjustable.
4. Check pressure settings and re-adjust if necessary.

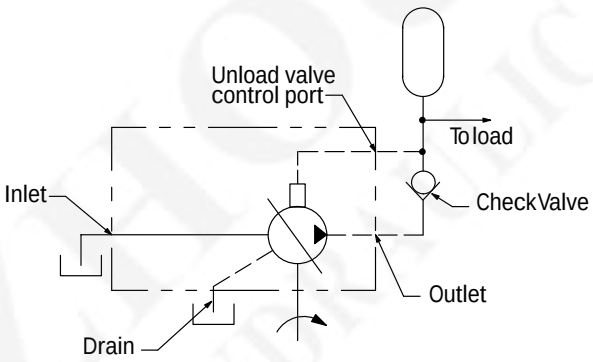

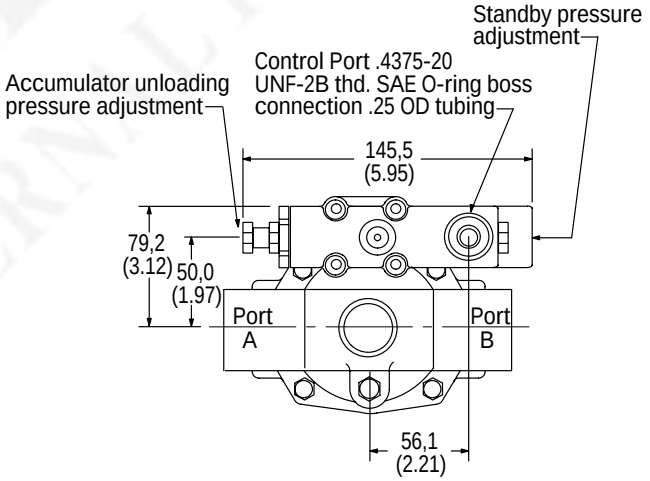

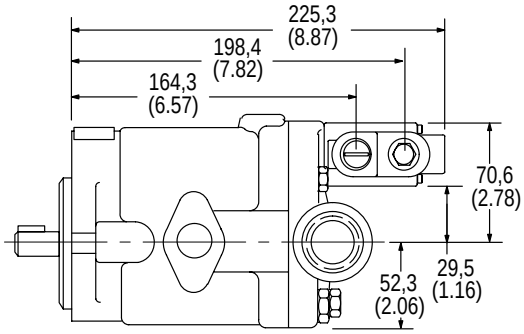

Model Number System PVQ20 and PVQ32

1	2	3	4	5	6	7	8	9	10	11	12	13	14	15	16	17	18	19	20	21	22	23	24	25	26	27	28	29	30
P	V	Q	2	0	A	2	R	A	9	S	E	1	S	2	1	C	*	2	1	V	*	1	1	B	D	1	2	S	*

Nos	Feature	Code	Description
1,2,3	Series PVQ	P V Q	Inline piston pump Variable volume Quiet series
4,5	Displacement in cc/rev and pressure ratings	20 32	21,1 cc/rev (1.29 cir), 210 bar (3000 psi) 32,9 cc/rev (2.01 cir), 140 bar (2000 psi)
6,7	Mounting flange specifications	B2 MB	Flange SAE J744 101-2 (SAE B) Flange ISO 3019/2-100A2HW (available with N" drive shaft only)
8	Rotation viewed from shaft end	R L	Right hand (cw), standard Left hand (ccw), optional
9,10	Thru-drive without coupling (available	Blank A9 A11	No thru-drive SAE J744 82-2 (SAE A) w/9T spline with side ports only) SAE J744 82-2 (SAE A) w/11T spline
11,12	Ports, type and location	SE SS	SAE O-ring rear port, 1.625" inlet and outlet (standard) SAE O-ring side port, 1.625" inlet and outlet (optional)
13	Shafts, input	1 3 N 28	Straight keyed SAE "B" modified, 2.31" long Splined SAE "B" modified, 13T 16/32 DP major dia. fit Shaft end ISO 3019/2 E25N (available with "MB" mount only) 26-tooth splined shaft. Used in PVQ20/32 single to mount on PVQ40/45 "B26" thru-drive.
14	Seals	S F	Buna N, standard Fluorocarbon, optional
15,16	Pump design number	21	Design number subject to change. Installation dimensions remain unchanged for designs 10-19.
17,18	Control type	C**	Pressure compensator. PVQ20: Standard model is C21, indicating setting of 210 bar (3000 psi); range is 02-21 in tens of bar (350-3000 psi). PVQ32: Standard model is C14, indicating factory setting of 138 bar (2000 psi); range is 02-14 in tens of bar (350-2000 psi).

Nos	Feature	Code	Description
		CM**	Low pressure compensator. Standard model is CM7, indicating factory setting of 70 bar (1000 psi); range is 02-10 in tens of bar (350-2000 psi).
		C**V**B	Pressure compensator C**, as above with load-sensing. Standard load-sensing setting is 11 bar (160 psi); range 10-17 bar (150-250 psi); with bleed-down orifice. Example: C21V11B indicates PVQ20 compensator with 210 bar pressure setting and 11 bar load-sense differential.
		C**V**P	Pressure compensator with load-sensing as C**V**B above, but with bleed-down orifice plugged.
		C**VC**B	Pressure compensator with load-sensing. Compensator same as C** above. Standard load-sensing setting is 24 bar (350 psi), range 17-31 bar (250-450 psi). With bleed-down orifice.
		C**VC**P	Pressure compensator with load-sensing. Same as C**VC**B above, but with bleed-down orifice plugged.
		CG	Pressure compensator modified for hydraulic remote control.
		CD**	Electric dual range compensator. PVQ20: CD21 is standard 210 bar setting of high range (24-210 bar). PVQ32: CD14 is standard 140 bar setting of high range (24-140 bar). Both units require low range to be set by customer (20-100 bar).
		UV	Unloading Valve for accumultor circuits. See installation details.

1	2	3	4	5	6	7	8	9	10	11	12	13	14	15	16	17	18	19	20	21	22	23	24	25	26	27	28	29	30
P	V	Q	2	0	A	2	R	A	9	S	E	1	S	2	1	C	*	2	1	V	*	1	1	B	D	1	2	S	*

Nos	Feature	Code	Description
19,20	Pressure setting	21	210 bar (3000 psi) PVQ20
		14	140 bar (2000 psi) PVQ32
21,22	Flow control option	Blank	No flow control
		V	
		VC	
23,24	Load sense differential pressure setting	Blank	No flow control
25	Flow control optional features	Blank	No flow control
		B	
		P	
26	Control option	Blank	Without adjustable maximum displacement stop (standard)
		D	Adjustable maximum displacement stop (optional)

Nos	Feature	Code	Description
27,28	Control design	12	C** and CM**
		12	C**D and CM**D
		13	C**V(C)**B and C**V(C)**P
		21	UV, CD** CG 30
29,30	Special pump option suffixes	S2	Shaft up mounting
		S3	British Standard Parallel Threads Counterbore Ports (ISO R288 threads). Contact Eaton for available configurations.
		S9	Special CG compensator for use with electronically modulated relief valves

RATINGS

Model Number System	Maximum Geometric Displacement cm^3/r (in^3/r)	Rated Speed r/min	Maximum Pressure bar (psi)	Input Power at Max. Pressure and Rated Speed kW (hp)	Approx. Weight kg (lb)
PVQ20	21,1 (1.290)	1800	210 (3000)	14,9 (20)	14 (31)
PVQ32	32,9 (2.010)	1800	140 (2000)	15,6 (21)	14 (31)

Pressure Limits:

Case pressure – 0,35 bar (5 psig) maximum
Inlet pressure – 0,2 bar (5 in. Hg) vacuum to 2 bar (30 psig)

Shaft Torque Data

PVQ20/32A9 and PVQ20/32A11

Thru-drive Shaft Torque Data

Any deviation from these maximum torque values must be approved by Eaton engineering.

THRU-DRIVE SHAFT TORQUE DATA

Model Number System*	Input Shaft Code	Maximum Input Torque Total Nm (lb. in.)	Maximum Thru-drive Torque Output Nm (lb. in.)
PVQ20/32A9	1	135 (1200)	
	3	208 (1850)	58 (517)
	N	337 (2987)	
PVQ20/32A11	1	135 (1200)	
	3	208 (1850)	123 (1100)
	N	337 (2987)	

*SAE "B" 4 inch thru-drive pilot not available in PVQ20/32 frame size.

Installation Dimensions

Vertical "Shaft-up" Installation – "S2" Drain Port Option

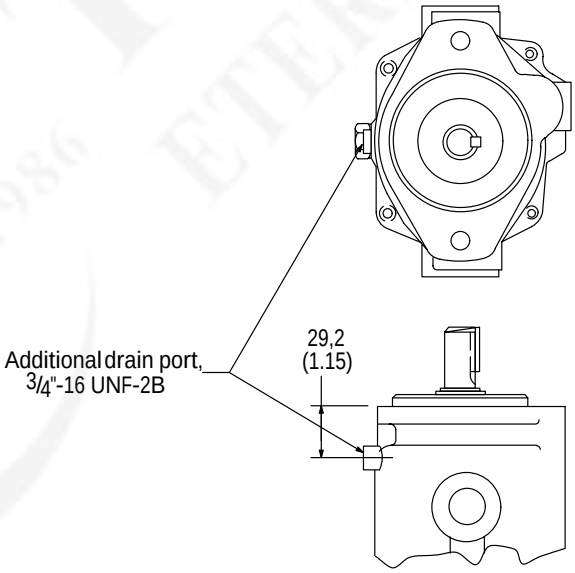

Installation Dimensions

Rear Ports, "C" and "CM" Controls, No. 1 Shaft

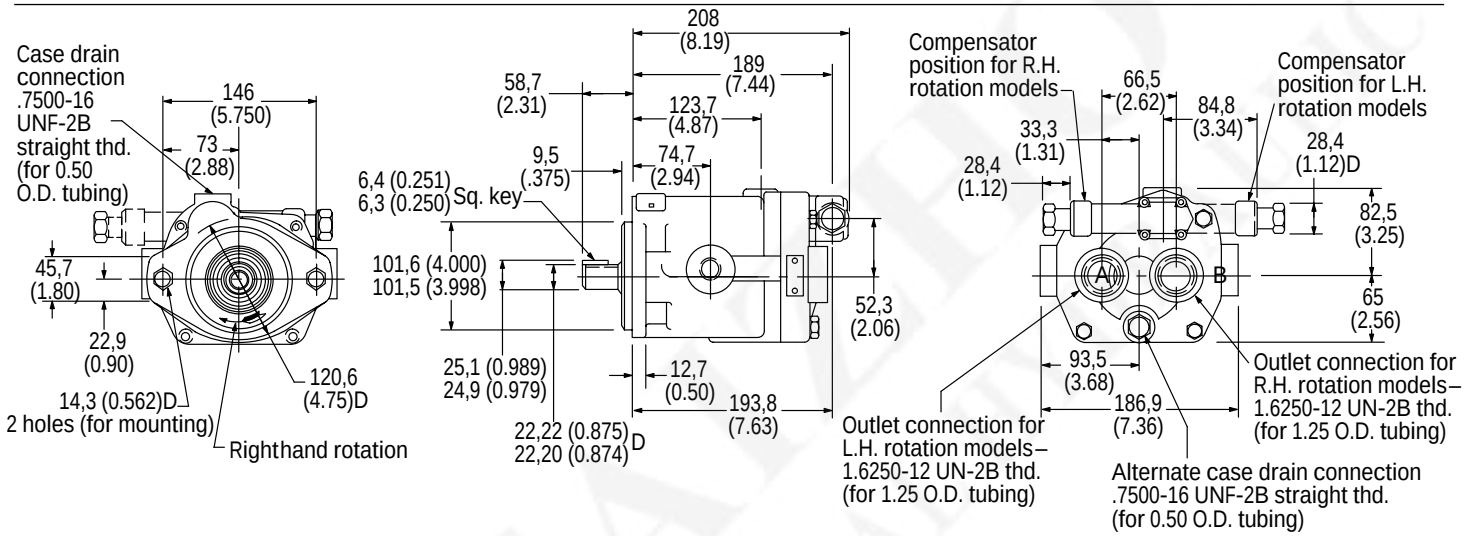

Caution – while pump is operating do not back compensator adjustment screw out beyond dimension shown.

Installation Dimensions

Side Ports

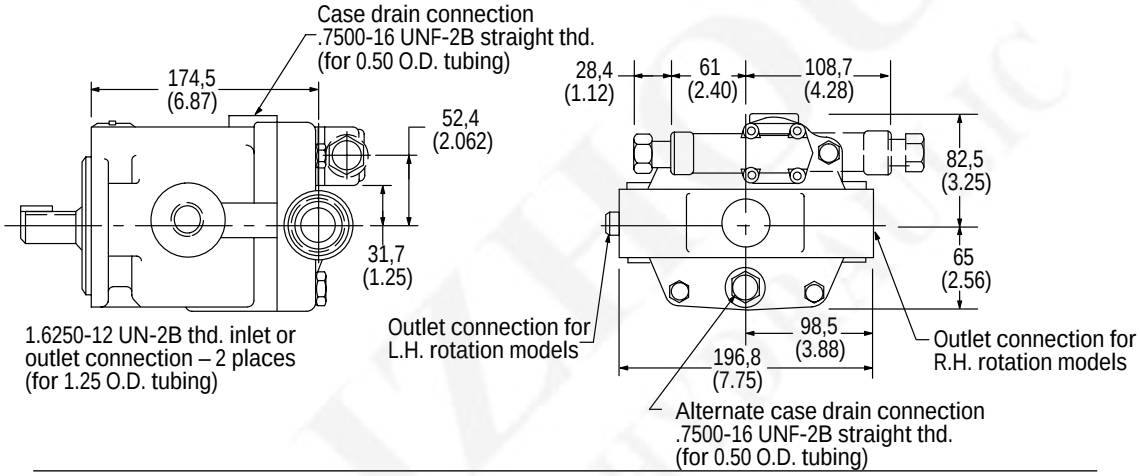

No. 3 Shaft

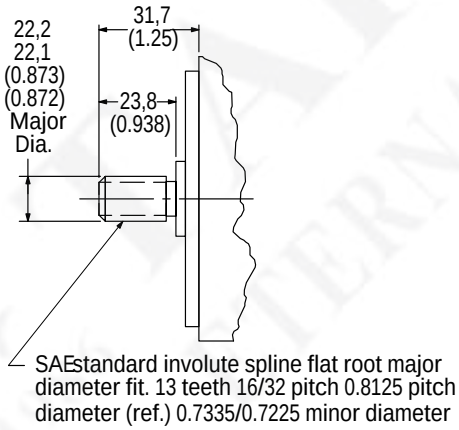

"N" Shaft with "MB" Flange

(Flange and shaft end ISO 3019/21000A2HW-E25N)

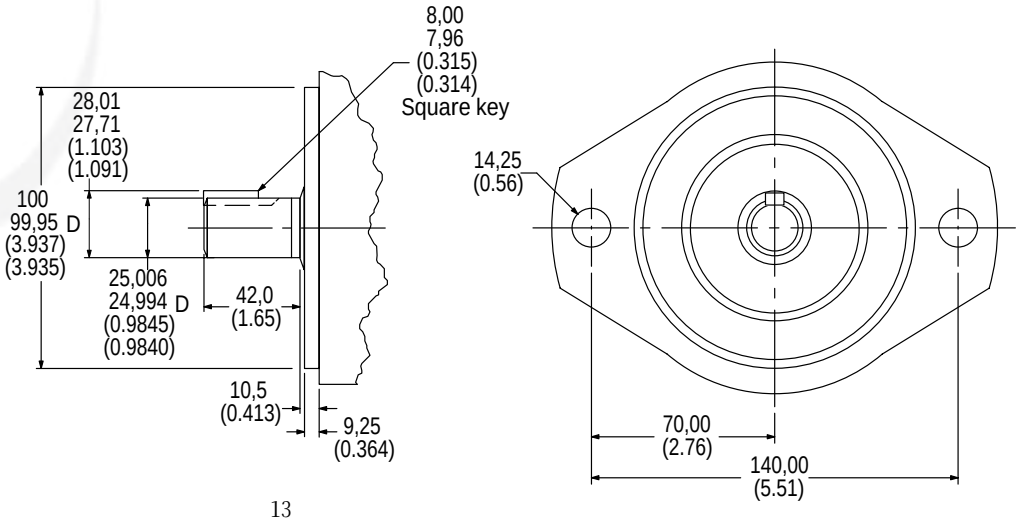

Controls

Remote Compensator

Adjustment

1. Turn pressure control (such as C-175) CCW to minimum setting.
2. Turn compensator adjustment plug to desired minimum pressure (17 bar, 250 psi or higher).
3. Full pressure range can now be obtained with pressure control.

Caution: Effective compensator pressure will be compensator control setting (17-69 bar, 250-1000 psig) plus remote relief valve setting.

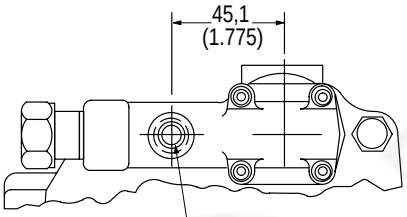

.4375-20 UNF-2B thread for "CG" control models. Connect to pressure control, such as C-175. SAE O-ring boss connection .250 O.D. tubing

Do not operate pump with this port plugged.

Load-sensing with Pressure Limiter

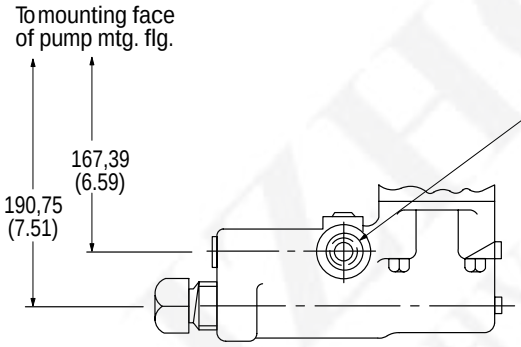

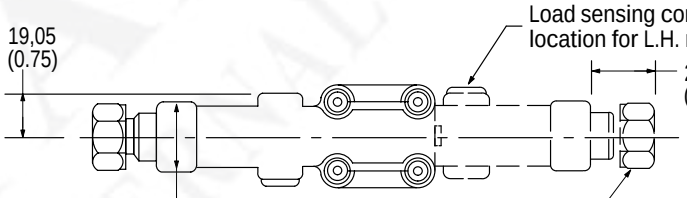

Compensator adj. knob. Do not back out adj. knob beyond 28,4 (1.12) dim. shown while pump is operating.

Pressure Compensator Control with Adjustable Max. Displacement Stop

Adjustment

Loosen locknut on adjusting rod. Turn adjusting rod clockwise (CW) to decrease maximum pump delivery or counter-clockwise (CCW) to increase maximum pump delivery until desired setting is obtained. Secure this setting by tightening locknut.

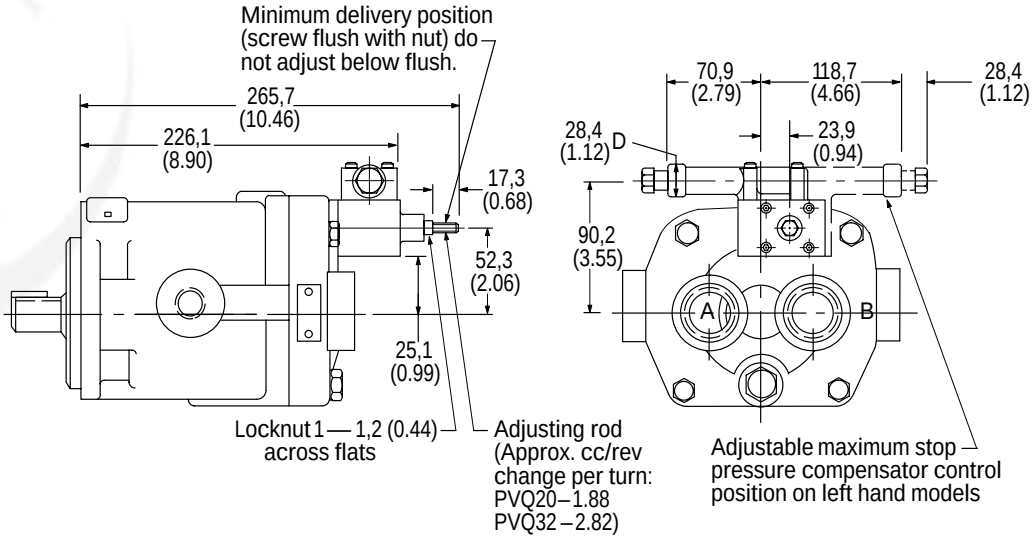

Electric Dual Range Pressure Compensator Control

Adjustment

1. With the directional valve de-energized, loosen locknut "5" and turn the adjusting screw "4" to the desired first stage pressure setting, then tighten locknut "5".
2. With solenoid de-energized, turn adjusting spool "1" counterclockwise (CCW) until nut "3" is bottomed in adjusting screw slot. (Second stage setting is now equal to first stage pressure setting.) Turn adjusting spool clockwise (CW) to desired second stage pressure requirements. One complete turn of adjusting spool equals approximately 41 bar (600 psi). Energize solenoid and check pressure setting. De-energize solenoid and re-adjust if necessary. Secure this setting by tightening locknut "2".

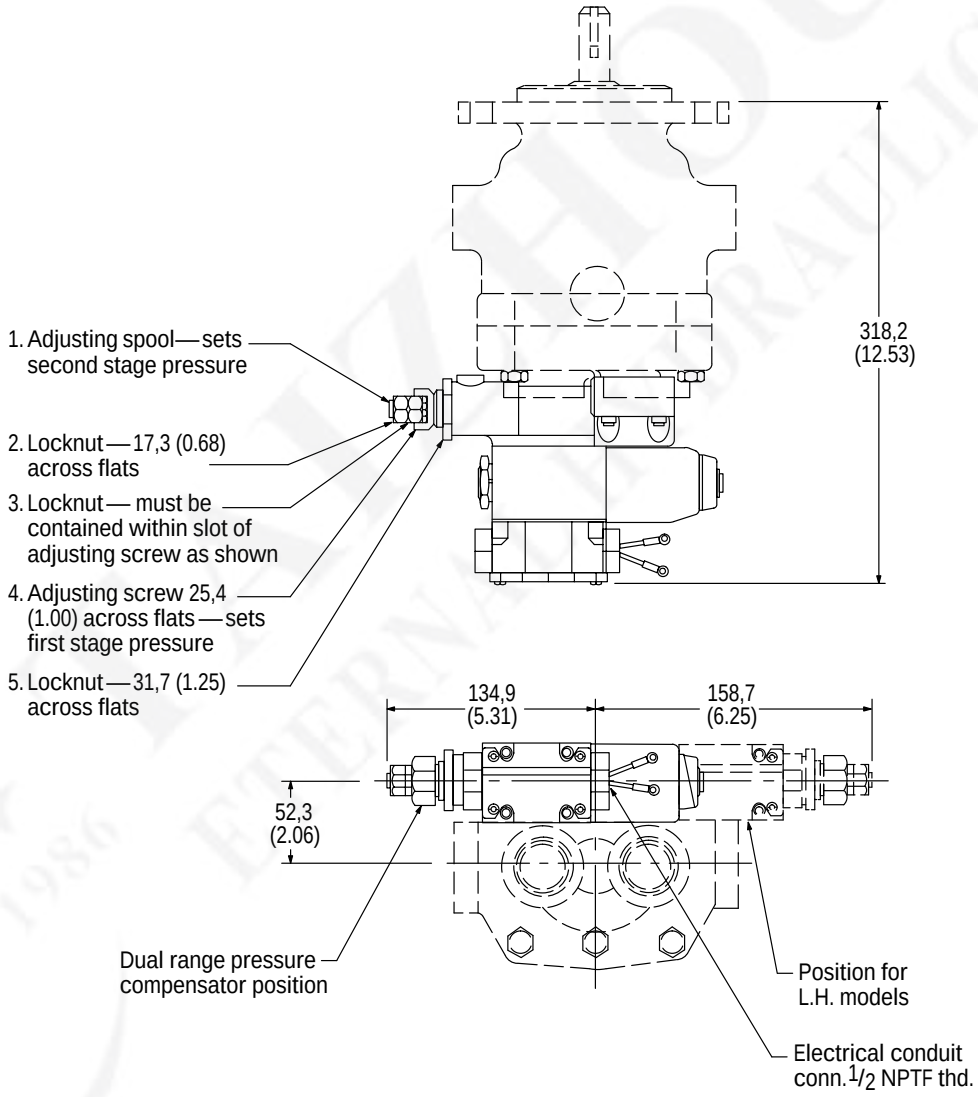

Solenoid Data (110V AC 50 Hz and 115/120V AC 60 Hz)

Solenoid current	Inrush amps (R.M.S.)	Holding amps
115/120V AC 60 Hz –	2.0	.54
110V AC 50 Hz		.64*

*Maximum peak inrush amps approximately 1.4 x R.M.S. value shown.

Refer to catalog GB-C-2015B for additional solenoid valve data.

Controls

Electric Dual Range Pressure Compensator with Maximum Displacement Stop

Maximum Flow Adjustment

With the system pressure below both compensator settings, loosen maximum stop adjusting screw locknut and adjust screw to desired flow position (turning screw clockwise decreases flow and turning screw counterclockwise increases flow). To lock screw in position, tighten locknut. To assist initial priming, adjust control setting to at least 40% of maximum flow position.

Compensator Control

1. With the directional valve de-energized, loosen locknut "5" and turn the adjusting screw "4" to the desired first stage pressure setting, then tighten locknut "5".
2. With directional valve de-energized, turn adjusting spool "1" counterclockwise until nut "3" is bottomed in adjusting screw slot. (Second stage setting is now equal to first stage pressure setting.) Turn adjusting spool clockwise to desired second stage pressure requirements. One complete turn of adjusting spool equals approximately 41 bar (600 psi). Energize solenoid and check pressure setting. De-energize solenoid and re-adjust if necessary. Secure this setting by tightening locknut "2".

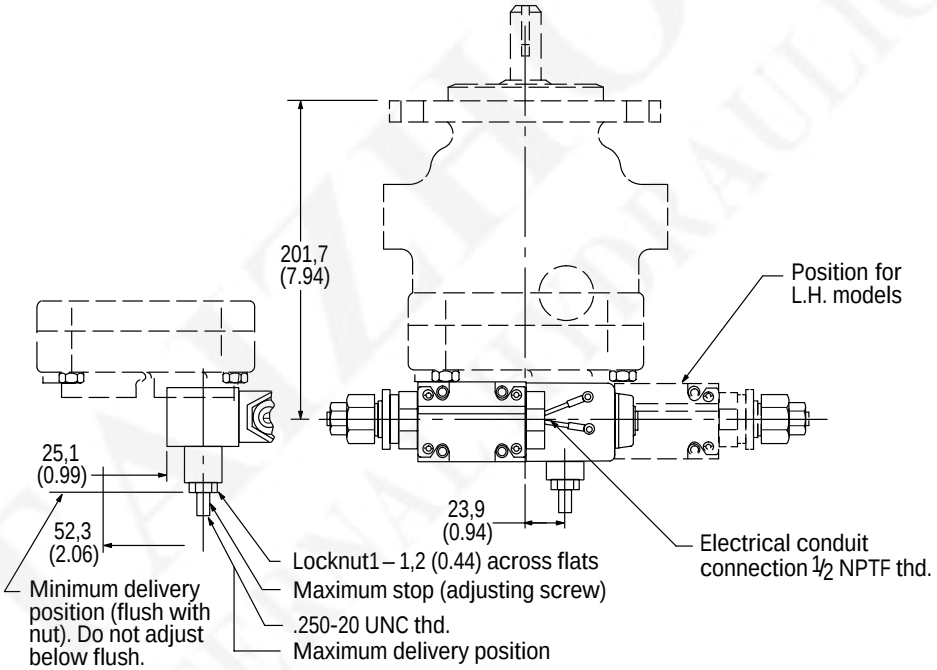

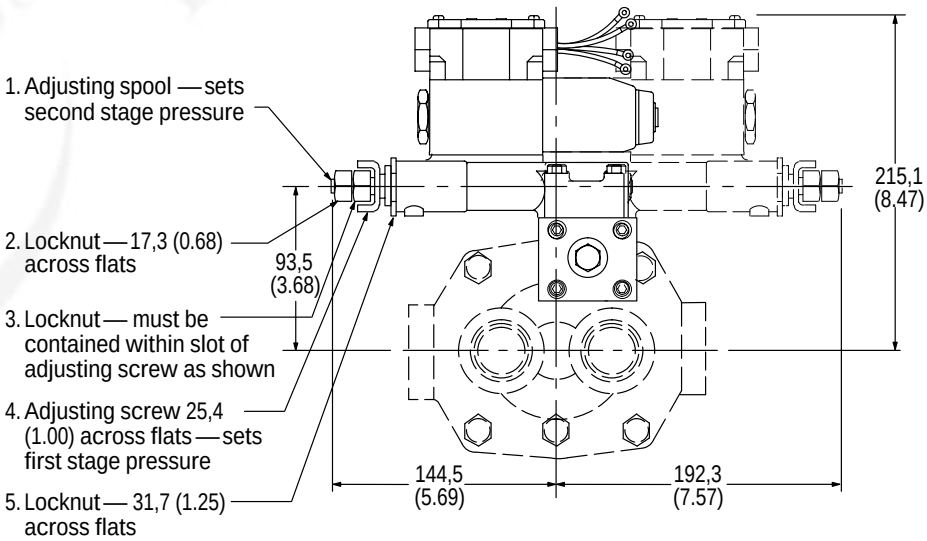

Controls

Unloading Valve Control

With the unloading valve control the variable pump will unload at a preset pressure. The pump will maintain this no flow, low pressure (approximately 14 bar [200 psi]) standby condition, until system pressure drops to about 85% of the preset unloading pressure. The pump will then return on stroke and provide full flow until the preset unloading pressure is reached again.

With this control, an efficient accumulator charging circuit is obtained. The pump will provide full flow to fill the accumulator until the maximum charging pressure is reached. The pump then goes to a standby condition until the accumulator pressure drops to 85% of the desired maximum. The accumulator is then recharged as the cycle starts over again.

A separate right angle check valve must be provided to maintain the accumulator hydraulic charge and prevent back flow when the pump is unloaded. The check valve's internal leakage must not exceed five drops per minute. The control port must be connected to system pressure, downstream of the check valve.

Adjustment range

PVQ20	100-210 bar (1500-3000 psi)
PVQ32	100-140 bar (1500-2000 psi)

Cut-in pressure is 85% of unloading pressure, minimum.

Setting Pressures

1. Back out accumulator unloading pressure adjustment screw to below desired unloading pressure.
2. Adjust desired standby pressure.
3. Set accumulator pressure by screwing in the accumulator unloading adjustment screw. Accumulator recharge (cut-in) pressure is a function of the maximum accumulator pressure and is not adjustable.
4. Check pressure settings and re-adjust if necessary.

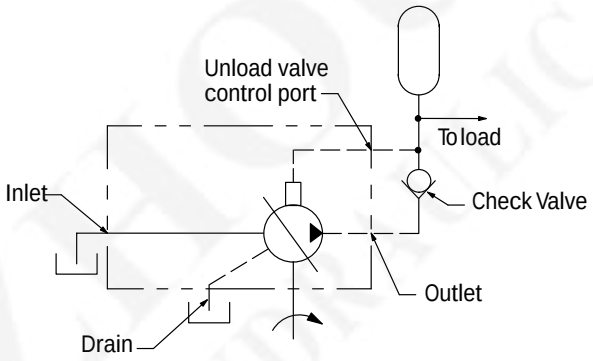

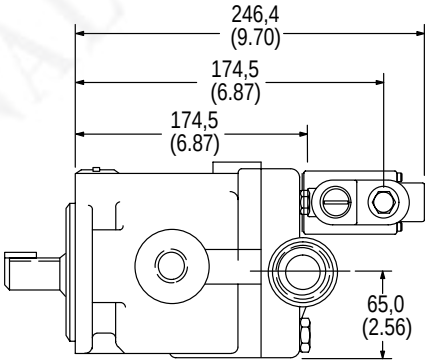

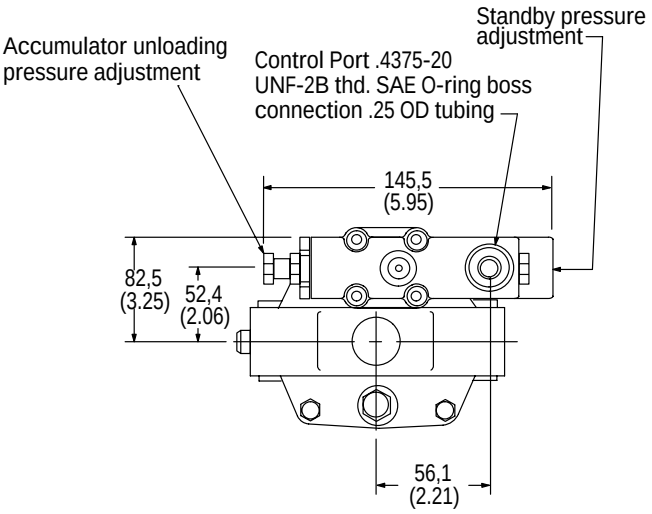

Thru-drives

PVQ20/32
“A9” and “A11”
SAE “A”

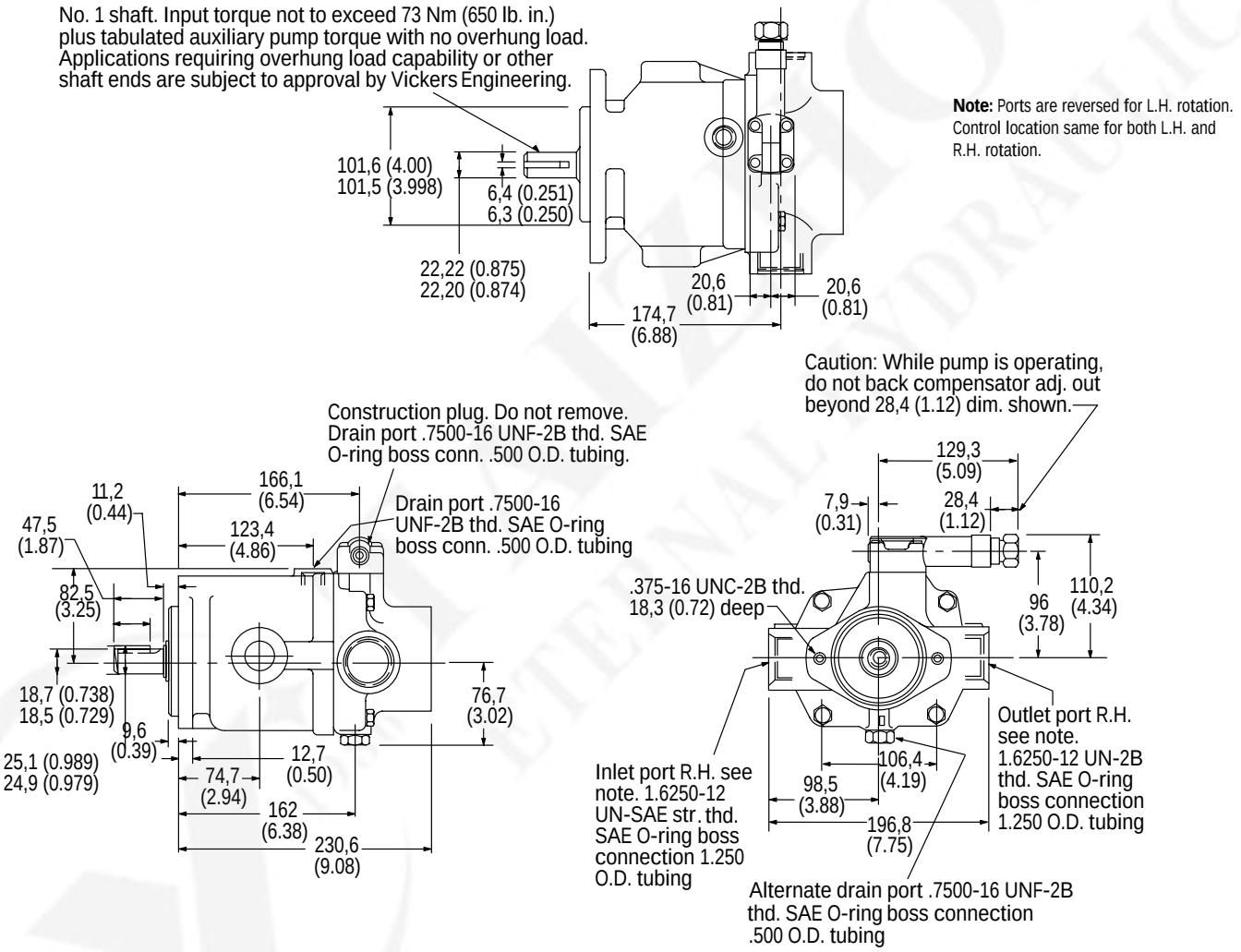

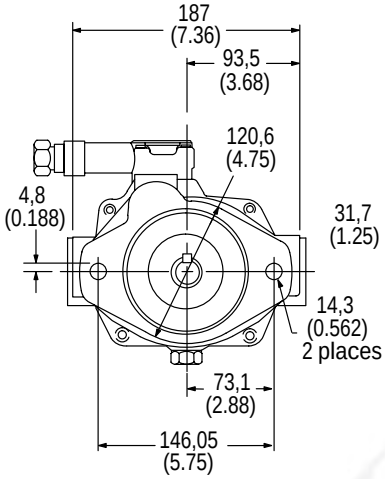

Note: Ports are reversed for L.H. rotation. Control location same for both L.H. and R.H. rotation.

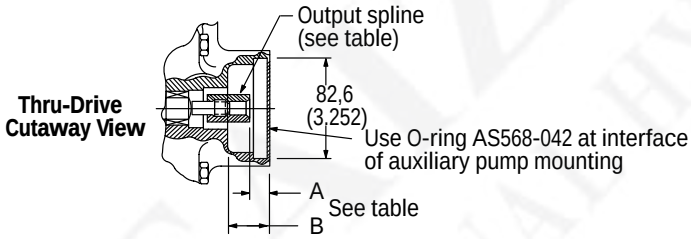

PVQ20/32 "A9" AND "A11" SAE "A"

Model Number System	Spline Data	Max. Torque Nm (in. lb.)	Installation Dimensions mm (in) A	B	Coupling Kit
"A9"	ASA B5.15-1960 9 teeth 16/32 DP Flat root side fit	58 (517)	16,7 (0.66)	33,0 (1.30)	02-136810
"A11"	ANS B92.1-1970 11 teeth 16/32 DP Flat root side fit	123 (1100)	18,5 (0.73)	39,1 (1.54)	02-306041

Note: O-ring included with pump. Coupling kit, cap screws, and washers must be ordered separately to mount rear pump.

Typical Rear Pumps (with shaft codes) for PVQ20/32 Thru-drives

TYPICAL REAR PUMPS (WITH SHAFT CODES) FOR PVQ20/32 THRU-DRIVES

Model Series	Typical Rear Pump	Rear Pump Shaft Code	Thru-drive Coupling Kit
"A9"	PVQ10/13	3	02-136810
	PVB5/6	S124 suffix	
	V10	11	
	V20	62	

Note: "A11" (not listed above) is intended for special application only.

Model Number System

PVQ25

1	2	3	4	5	6	7	8	9	10	11	12	13	14	15	16	17	18	19	20	21	22	23	24	25	26	27	28	29	30	31
P	V	Q	2	5	A	R	1	1	A	A	1	0	B	1	1	2	4	0	0	A	2	0	0	1	A	P	C	9	0	1

Nos	Feature	Code	Description
1,2	Code title	PV	Open circuit piston pump
3,4,5,6	Displacement	Q25A	25.2cm^3/r [1.54 in^3/r]
7	Input shaft rotation	L	Left-hand rotation (CCW)
		R	Right-hand rotation (CW)
8,9	Front mounting and input shaft	01	2 Bolt B (SAE J744-101-2) with 22.2 [.88] DIA straight keyed shaft (SAE J744-22-1), key included
		05	2 Bolt B (SAE J744-101-2) with 13T 16/32DP 41.1 [1.62] long splined shaft
		09	2 Bolt B (SAE J744-101-2) with 26T 32/64DP splined shaft
		10	Shaft-2 Bolt VDMA A with 25.0 [.984] DIA straight keyed shaft, key included
10,11	Main ports location and size	AU	End ports; tube ports per SAE J514, suction 1.625-12 UN-2B, pressure – 1.0625-12 UN-2B SAE
		AV	End ports; tube ports per ISO 6149-1, suction M42 x 2, pressure – M27 x 2
12	Drain port size	6	M18 metric O-ring port – top (D1)
		7	M18 metric O-ring port – bottom (D2)
		8	M18 mertic O-ring port – shaft up
		B	.750-16 UNF-2B SAE O-ring port – top (D1)
		C	.750-16 UNF-2B SAE O-ring port – bottom (D2)
		D	.750-16 UNF-2B SAE O-ring port – shaft up

Nos	Feature	Code	Description
13	Diagnostic pressure point	0	No diagnostic pressure point
14	Controller type	C	Electric dual range pressure Compensator with directional control valve
		E	Unloading valve (accumulator circuits)
		G	Adjustable pressure compensator
		H	Adjustable pressure and flow compensator
		J	Adjustable hydraulic remote control pressure compensator
15,16	Pressure comp./ unloading valve setting	07	65.5-72.4 bar [950-1050 lbf/in2]
		33	206.8-213.7 bar [3000-3100 lbf/in2]
17,18	Flow comp. setting or unload VLV standby	00	No flow compensator setting
		11	9.65-12.41 bar [140-180 lbf/in2]
		24	22.75-25.51 bar [330-370 lbf/in2]
19,20	Secondary compensator setting	00	No secondary compensator setting
		04	186.2-193.1 bar [2700-2800 lbf/in2]
21	Control special features	0	No special features
		A	Bleed down orifice –
		B	External manual stroke adjustment
22	Maximum displacement option	1	Standard displacement
		2	Adjustable maximum displacement (set at maximum)

Note: Consult an Eaton representative for additional settings

1	2	3	4	5	6	7	8	9	10	11	12	13	14	15	16	17	18	19	20	21	22	23	24	25	26	27	28	29	30	31
P	V	Q	2	5	A	R	1	1	A	A	1	0	B	1	1	2	4	0	0	A	2	0	0	1	A	P	C	9	0	1

Nos	Feature	Code	Description
23,24	Auxiliary mounting and output shaft	00	No auxiliary mounting or output shaft
25	Shaft seals	0	No shaft seal
		1	Standard shaft seal (nitrile) Vitron option
		3	Flurocarbon
		4	HNBR shaft seal luster glycol fluids
26,27	Special features	AP	Cast iron housing and industrial timing
28,29	Paint	00	No paint
		CD	Blue primer
30	Customer and unit identification	0	STD – mark assembly Number and build data Code on plate
31	Design code	A	First

Note: Consult an Eaton representative for additional settings

RATINGS

Model Number System	Maximum Geometric Displacement cm^3/r (in^3/r)	Rated Speed r/min	Maximum Pressure bar (psi)	Input Power at Max. Pressure and Rated Speed kW (hp)	Approx. Weight kg (lb)
PVQ25	25,2 (1.54)	1800	210 (3000)	16 (24)	14 (31)

Pressure Limits:

Case pressure – 0,35 bar (5 psig) maximum
Inlet pressure – 0,2 bar (5 in. Hg) vacuum to 2 bar (30 psig)

Installation Drawings

PVQ25 with Pressure Compensator Control

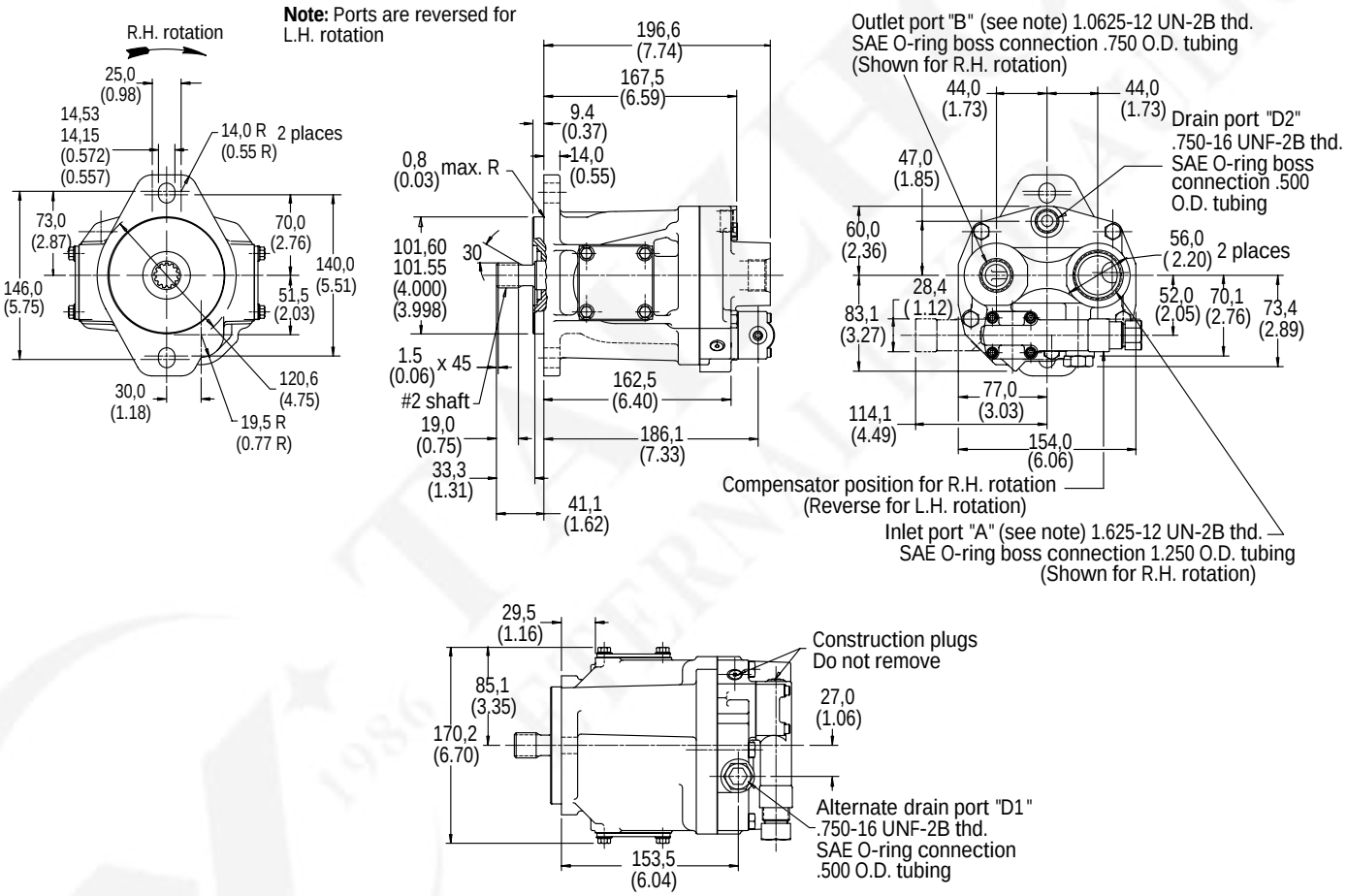

Shaft Options

No. 1 Shaft

SAE "B" Straight keyed

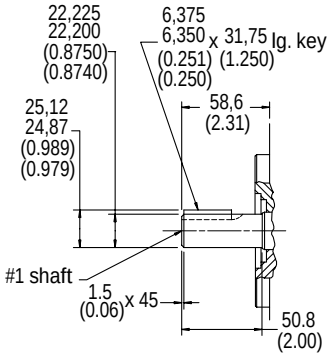

No. 10 Mounting and Input Shaft

(Flange and shaft end ISO 3019/21000A2HW-E25N)

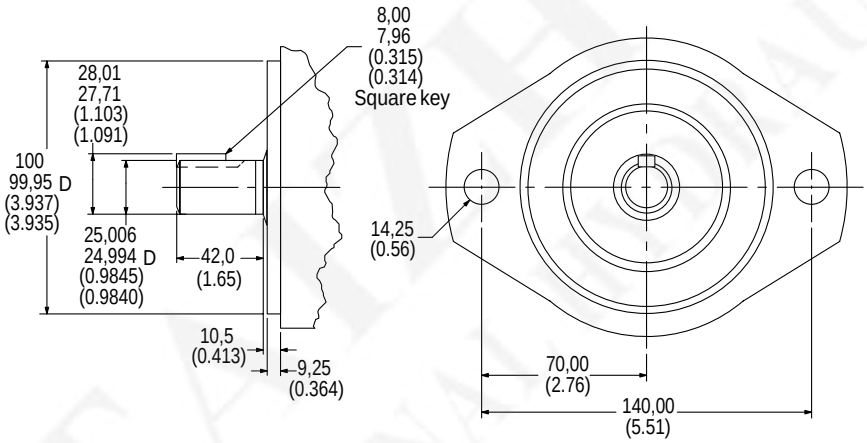

Controls

Load Sensing with Pressure Limiter

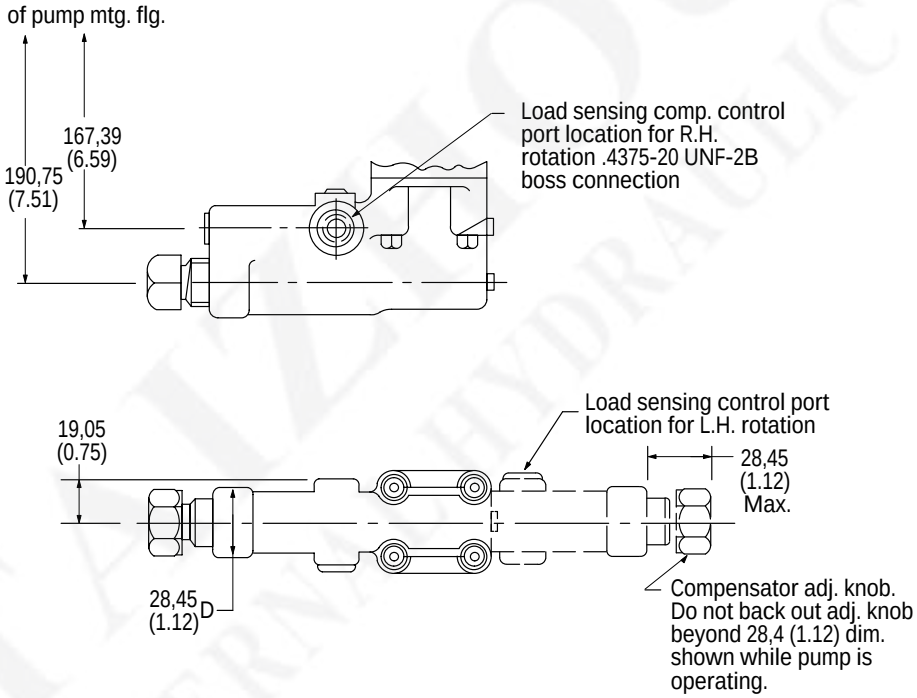

Remote Compensator

Adjustment

1. Turn pressure control (such as C-175) CCW to minimum setting.
2. Turn compensator adjustment plug to desired minimum pressure (17 bar, 250 psi or higher).
3. Full pressure range can now be obtained with pressure control.

Caution: Effective compensator pressure will be compensator control setting (17-69 bar, 250-1000 psig) plus remote relief valve setting.

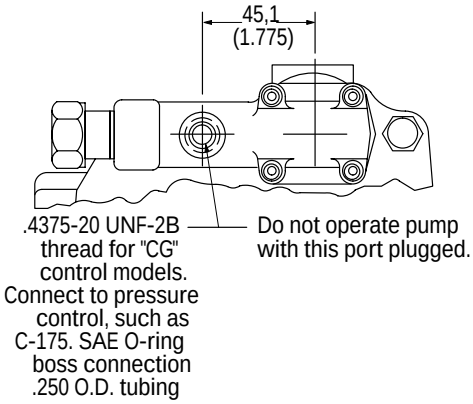

Pressure Compensator Control with Adjustable Max. Displacement Stop

Adjustment

Loosen locknut on adjusting rod. Turn adjusting rod clockwise (CW) to decrease maximum pump delivery or counterclockwise (CCW) to increase maximum pump delivery until desired setting is obtained. Secure this setting by tightening locknut.

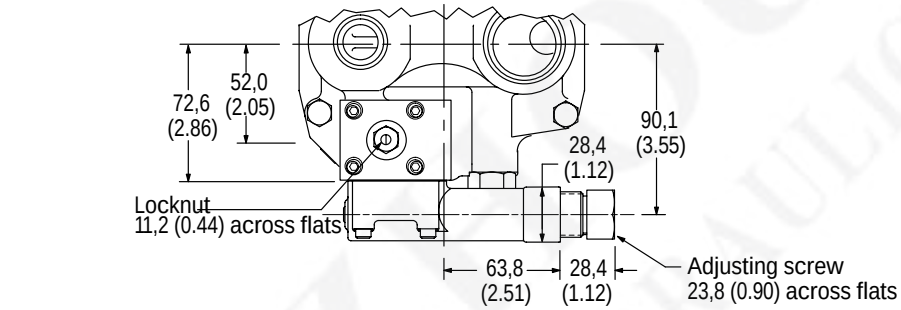

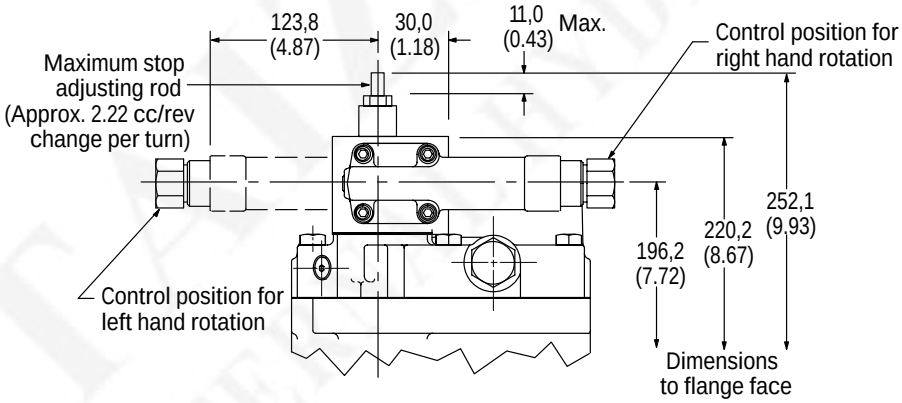

Controls

Electric Dual Range Pressure Compensator Control

Adjustment

1. With the directional valve de-energized, loosen locknut "5" and turn the adjusting screw "4" to the desired first stage pressure setting, then tighten locknut "5".
2. With solenoid de-energized, turn adjusting spool "1" counterclockwise (CCW) until nut "3" is bottomed in adjusting screw slot. (Second stage setting is now equal to first stage pressure setting.) Turn adjusting spool clockwise (CW) to desired second stage pressure requirements. One complete turn of adjusting spool equals approximately 41 bar (600 psi). Energize solenoid and check pressure setting. De-energize solenoid and re-adjust if necessary. Secure this setting by tightening locknut "2".

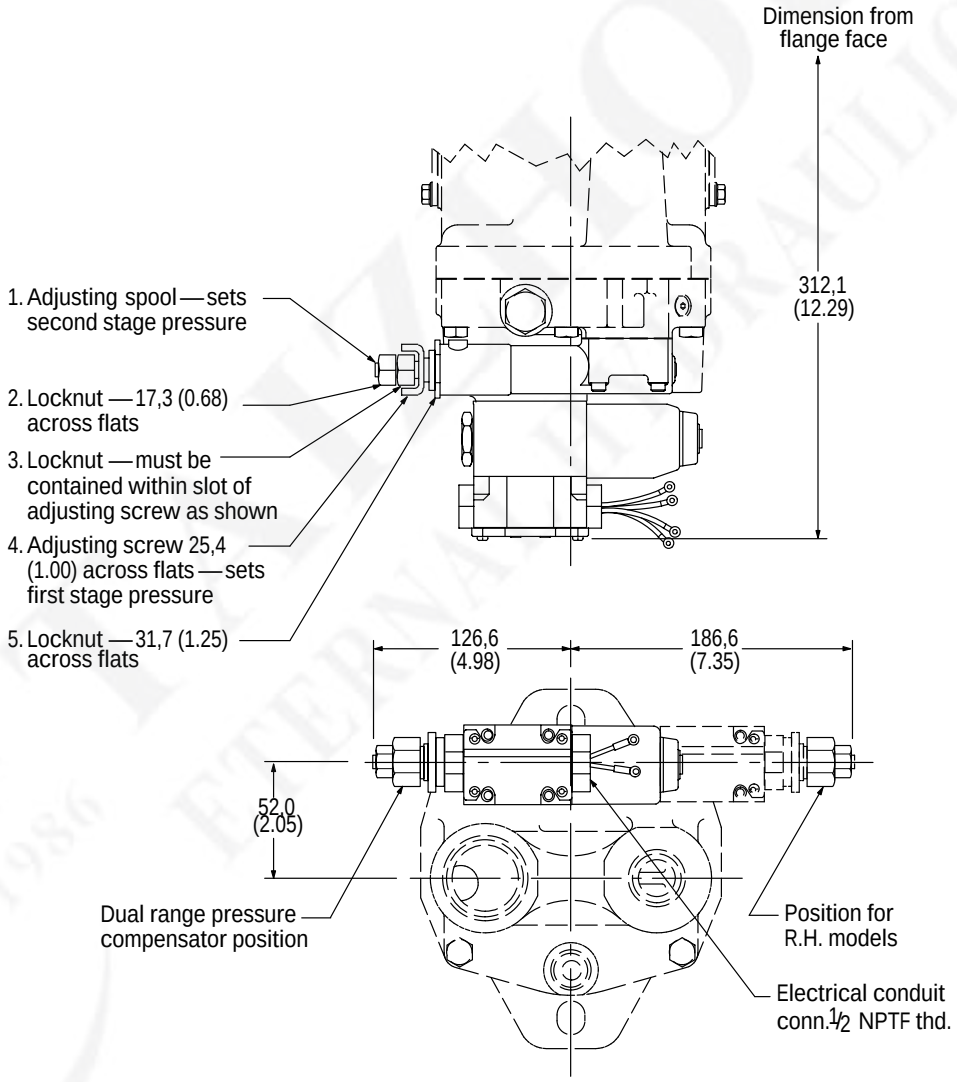

Solenoid Data (110V AC 50 Hz and 115/120V AC 60 Hz)

Solenoid current	Inrush amps (R.M.S.)	Holding amps
115/120V AC 60 Hz – 110V AC 50 Hz	2.0	.54 .64*

*Maximum peak inrush amps approximately 1.4 x R.M.S. value shown.

Refer to catalog GB-C-2015B for additional solenoid valve data.

Controls
Electric Dual Range Pressure Compensator with Maximum Displacement Stop

Maximum Flow Adjustment

With the system pressure below both compensator settings, loosen maximum stop adjusting screw locknut and adjust screw to desired flow position (turning screw clockwise decreases flow and turning screw counterclockwise increases flow). To lock screw in position, tighten locknut. To assist initial priming, adjust control setting to at least 40% of maximum flow position.

Compensator Control

1. With the directional valve de-energized, loosen locknut "5" and turn the adjusting screw "4" to the desired first stage pressure setting, then tighten locknut "5".
2. With directional valve de-energized, turn adjusting spool "1" counterclockwise until nut "3" is bottomed in adjusting screw slot. (Second stage setting is now equal to first stage pressure setting.) Turn adjusting spool clockwise to desired second stage pressure requirements. One complete turn of adjusting spool equals approximately 41 bar (600 psi). Energize solenoid and check pressure setting. De-energize solenoid and re-adjust if necessary. Secure this setting by tightening locknut "2".

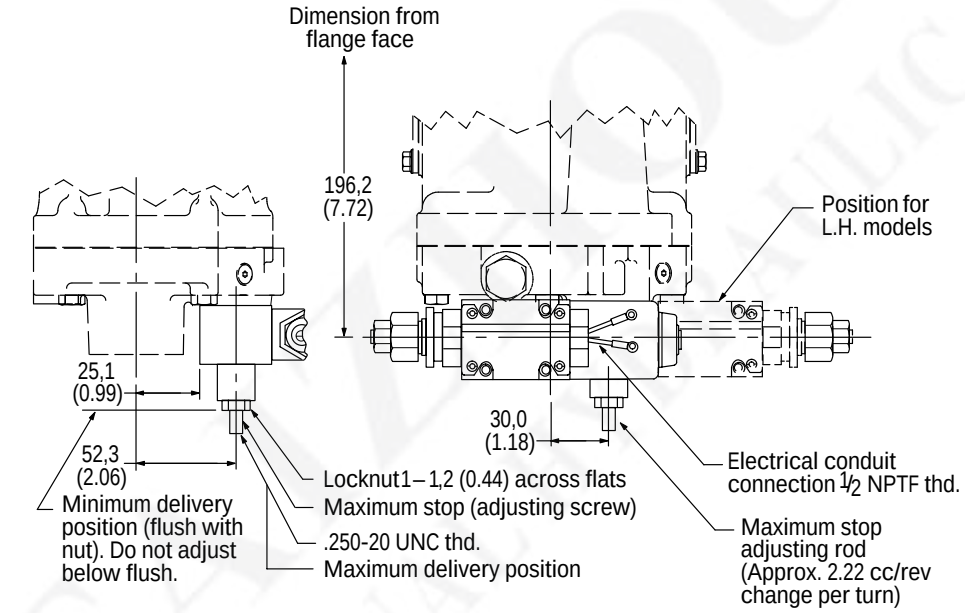

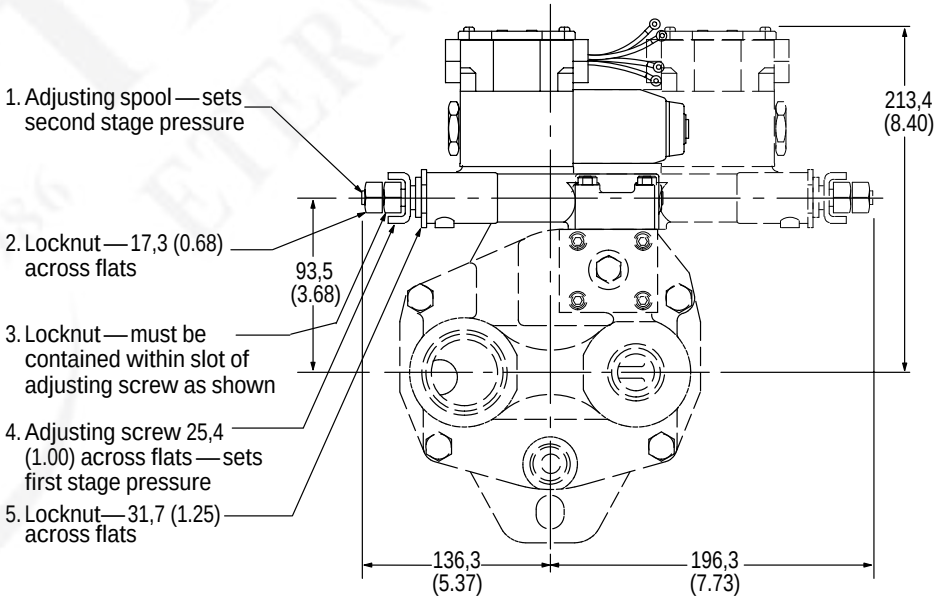

Controls

Unloading Valve Control – "E" Option

With the unloading valve control the variable pump will unload at a preset pressure. The pump will maintain this no flow, low pressure (approximately 14 bar [200 psi]) standby condition, until system pressure drops to about 85% of the preset unloading pressure. The pump will then return on stroke and provide full flow until the preset unloading pressure is reached again.

With this control, an efficient accumulator charging circuit is obtained. The pump will provide full flow to fill the accumulator until the maximum charging pressure is reached. The pump then goes to a standby condition until the accumulator pressure drops to 85% of the desired maximum. The accumulator is then recharged as the cycle starts over again.

A separate right angle check valve must be provided to maintain the accumulator hydraulic charge and prevent back flow when the pump is unloaded. The check valve's internal leakage must not exceed five drops per minute. The control port must be connected to system pressure, downstream of the check valve.

Adjustment range

PVQ25 100-210 bar (1500-3000 psi)

Cut-in pressure is 85% of unloading pressure, minimum.

Setting Pressures

1. Back out accumulator unloading pressure adjustment screw to below desired unloading pressure.
2. Adjust desired standby pressure.
3. Set accumulator pressure by screwing in the accumulator unloading adjustment screw. Accumulator recharge (cut-in) pressure is a function of the maximum accumulator pressure and is not adjustable.
4. Check pressure settings and re-adjust if necessary.

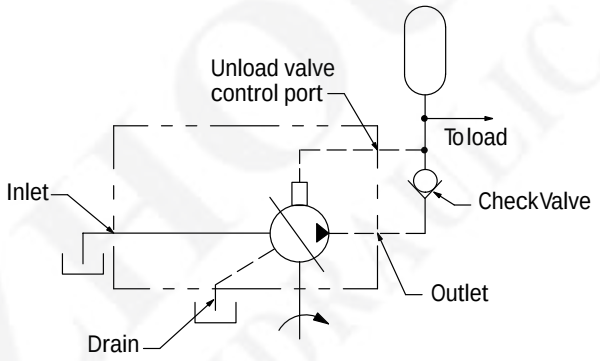

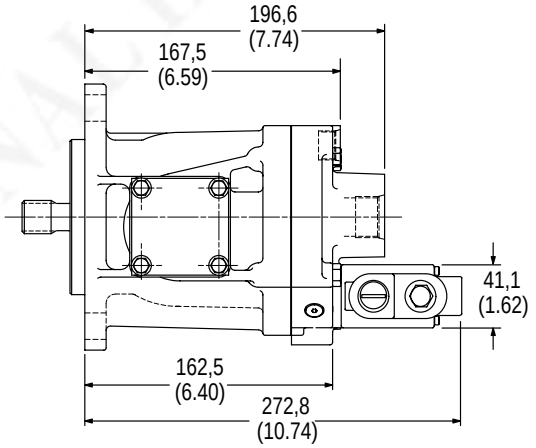

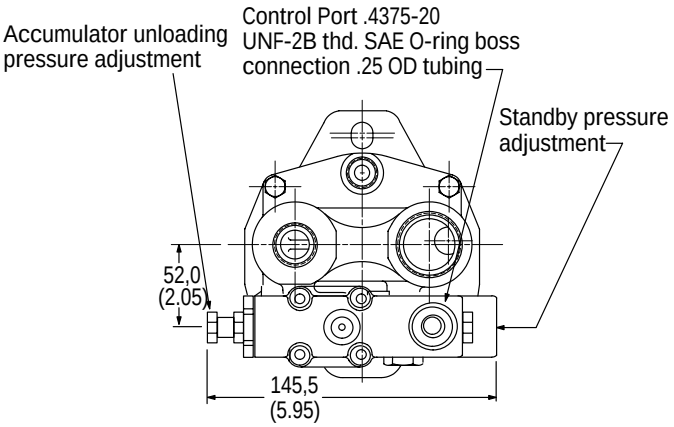

Model Number System PVQ40 and PVQ45

1	2	3	4	5	6	7	8	9	10	11	12	13	14	15	16	17	18	19	20	21	22	23	24	25	26	27	28	29	30	31
P	V	Q	4	0	A	R	1	1	A	A	1	0	B	1	1	2	4	0	0	A	1	A	A	1	A	F	C	D	0	1

Nos	Feature	Code	Description
1,2	Code title	PV	Open circuit piston pump
3,4,5,6	Displacement	Q40A	41.0cm³/r [2.50 in³/r]
		Q45A	45.1cm³/4 [2.75 in³/r]
7	Input shaft rotation	L	Left-hand rotation (CCW)
		R	Right-hand rotation (CW)
8,9	Front mounting and input shaft	01	2 Bolt B (SAE J744-101-2) with 22.2 [.88] DIA straight key shaft (SAE J744-22-1) (key included)
		02	2 Bolt B-B (SAE J744-101-2) with 25.4 [1.00] DIA straight key shaft (SAE J744-25-1) (key included)
		05	2 Bolt B-B (SAE J744-101-2) with 13T 16/32DP 41.1 [1.62] long splined shaft
		08	2 Bolt B-B (SAE J744-101-2) with 15T 16/32DP splined shaft
		09	2 Bolt B (SAE J744-101-2) with 26T 32/64DP splined shaft
		10	Shaft-2 Bolt VDMA A with25.0 [.984] DIA straight keyed shaft, key included
10,11	Main ports location and size	AA	Side ports; tube ports per SAE J514, suction – 1.875-12 UN-2B, pressure – 1.3125-12 UN-2B
		AB	End ports; tube ports per SAE J514, suction – 1.875-12 UN-2B, pressure – 1.3125-12 UN-2B
		AC	Side ports; SAE J518 flange, suction – 1.500 SAE 4-bolt split flange port (code 61); pressure – 1.000 SAE 4-bolt split flange port (code 61)
		AD	End ports; SAE J518 flange, suction – 1.500 SAE 4-bolt split flange port (code 61); pressure – 1.000 SAE 4-bolt split flange port (code 61)
		AE	Side ports; ISO 6149-1 tube, suction – M48 X 2, pressure – M33 X 2
		AF	End ports; ISO 6149-1 tube, suction – M48 X 2, pressure – M33 X2
		AS	End ports; ISO 6162 flange, suction – 1.500 SAE 4-bolt split flange port with M12 X 1.75 threads; pressure – 1.000 SAE 4-bolt split flange port with M10 X 1.5 threads

Nos	Feature	Code	Description
12	Drain port size and location	1	.875-14 UNF-2B SAE O-ring port–top (D1)
		2	.875-14 UNF-2B SAE O-ring port – bottom (D2)
		3	.875-14 UNF-2B SAE O-ring port – shaft up
		6	M18 X 1.5 metric O-ring port – top (D1)
		7	M18 X 1.5 metric O-ring port – bottom (D2)
		8	M18 X 1.5 metric O-ring port – shaft up
13	Diagnostic pressure port	0	No diagnostic pressure port
		1	.4375-20 UNF-2B SAE O-ring port – plugged
		2	M14 X 1.5 metric O-ring port – plugged
14	Controller type	C	Electric dual range pressure compensator with directional control valve
		E	Unloading valve (accumulator circuits)
		G	Adjustable pressure compensator
		H	Adjustable pressure and flow compensator
		J	Adjustable hydraulic remote control pressure compensator
15,16	Pressure comp./ unloading valve	07	65.5-72.4 bar [950-1050 lbf/in²]
		18	182.7-189.6 bar [2650-2750 lbf/in²]
		33	206.8-213.7 bar [3000-3100 lbf/in²]
17,18	Flow comp. setting or unload valve standby	00	No flow compensator setting
		11	9.65-12.41 bar [140-180 lbf/in²]
		14	12.41-15.17 bar [180-220 lbf/in²]
		24	22.75-25.51 bar [330-370 lbf/in²]
19,20	Secondary comp. setting	00	No secondary compensator setting
		04	186.2-193.1 bar [2700-2800 lbf/in²]
21	Control special features	0	No special features
		A	Bleed down orifice
		B	External manual stroke adjustment
22	Maximum displacement option	1	Standard displacement
		2	Adjustable maximum displacement (set at maximum)

Note: Consult an Eaton representative for additional settings

1	2	3	4	5	6	7	8	9	10	11	12	13	14	15	16	17	18	19	20	21	22	23	24	25	26	27	28	29	30	31
P	V	Q	4	0	A	R	1	1	A	A	1	0	B	1	1	2	4	0	0	A	1	A	A	1	A	F	C	D	0	1

Nos	Feature	Code	Description
23,24	Auxiliary mounting output shaft	00	No auxiliary mounting or output shaft
		AA	2 Bolt A (SAE J744-82-2) w/ 9T 16/32DP external splined shaft
		AB	2 Bolt A (SAE J744-82-2) w/ 11T 16/32DP external splined shaft
		AC	2 Bolt B (SAE J744-101-2) w/ 13T 16/32 DP internal splined coupling
		AD	2 Bolt B (SAE J744-101-2) w/ 15T 16/32DP internal splined coupling
		AE	2 Bolt B (SAE J744-101-2) w/ 26T 32/64DP external splined shaft
		AH	2 Bolt A (SAE J744-82-2) w/ 9T 16/32DP internal splined coupling
		AJ	2 Bolt A (SAE J744-82-2) w/ 11T 16/32DP internal splined coupling
		AK	2 Bolt B (SAE J744-101-2) w/ 26T 32/64DP internal splined coupling
25	Shaft seals	0	No shaft seal
		1	Standard shaft seal (fluorocarbon)
		8	HNBR shaft seal (water glycol)
26,27	Special features	AP	Cast iron housing and industrial timing
28,29	Paint	00	No paint
		CD	Blue primer
30	Customer and unit	0	STD – mark assembly number, full model code and build date code on plate
31	Design code	A	First design

Note: Consult an Eaton representative for additional settings

RATINGS

Model Number System	Maximum Geometric Displacement cm^3/r (in^3/r)	Rated Speed r/min	Maximum Pressure bar (psi)	Input Power at Max. Pressure and Rated Speed kW (hp)	Approx. Weight kg (lb)
PVQ40	41,5 (2.500)	1800	210 (3000)	27,6 (37)	20,6 (45.4)
PVQ45	45,1 (2.750)	1800	186 (2700)	28,3 (38)	20,6 (45.4)

Pressure Limits:

Inlet pressure – 0,2 bar (5 in. Hg) vacuum to 2 bar (30 psig)
Case pressure – 0,35 bar (5 in. Hg) maximum

Note: Integral relief valve limits case pressure peaks to 0,7 bar (10 psi) higher than inlet pressure to protect pump. Flow from valve is returned directly to pump inlet. Use of case drain line required to limit steady-state case pressure.

Controls

Side Port Controls, No. 2 Mounting and Input Shaft

Millimeters (inches)

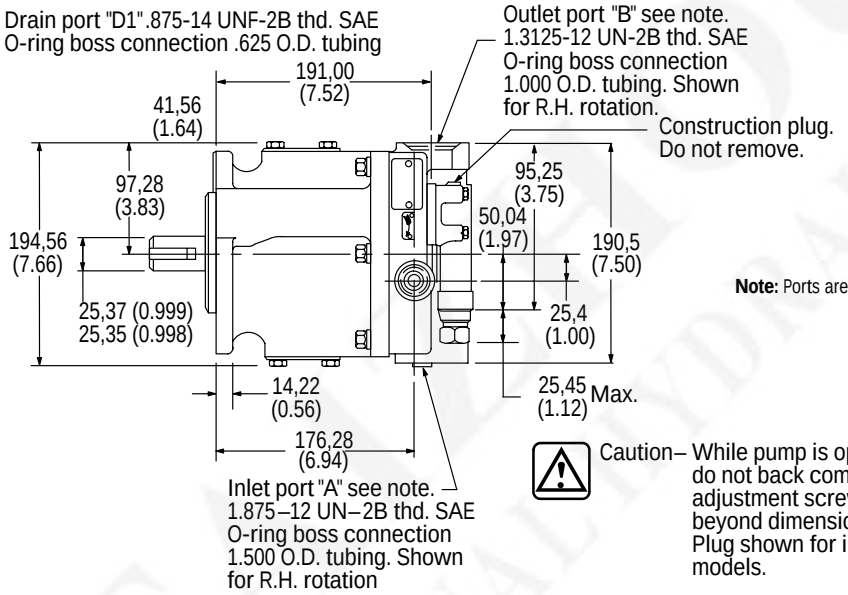

Note: Ports are reversed for L.H. rotation

Caution– While pump is operating do not back compensator adjustment screw out beyond dimension shown. Plug shown for industrial models.

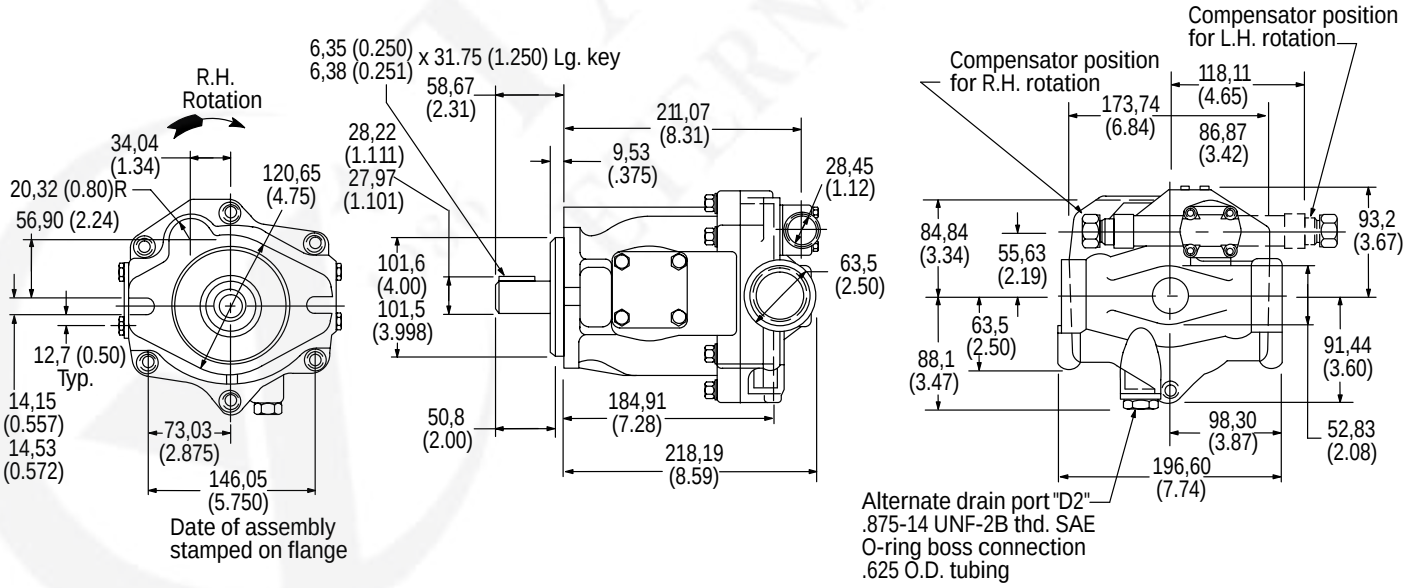

Rear Ports

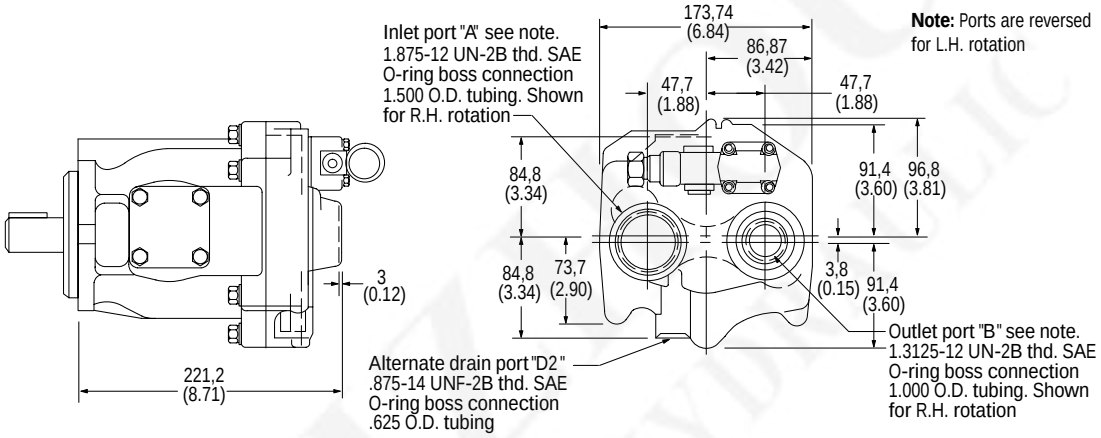

No. 1 Shaft: SAE "B" Straight Keyed

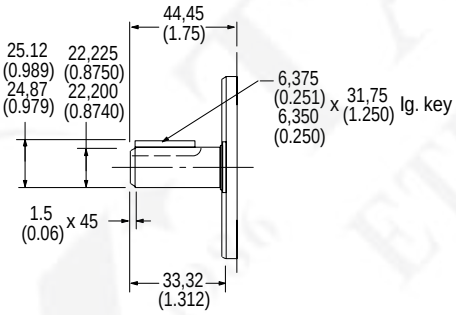

No. 05 Shaft SAE "B" Splined

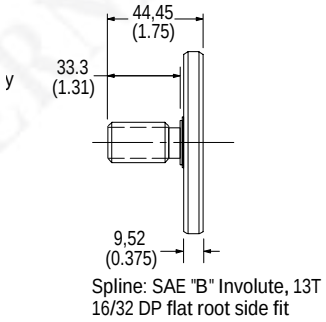

No. 08 Mounting and Input Shaft SAE "B-B" Splined

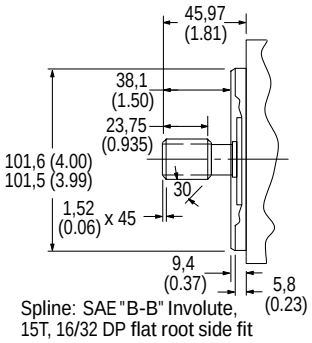

No. 10 Mounting and Input Shaft with VDMA Flange

(Flange and shaft end ISO 3019/2-100A2HW-E25N)

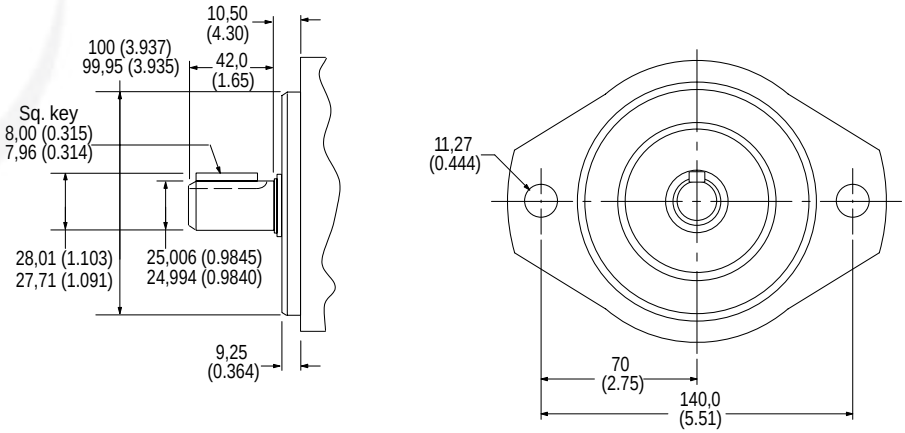

Controls

Pressure Compensator with Load Sensing

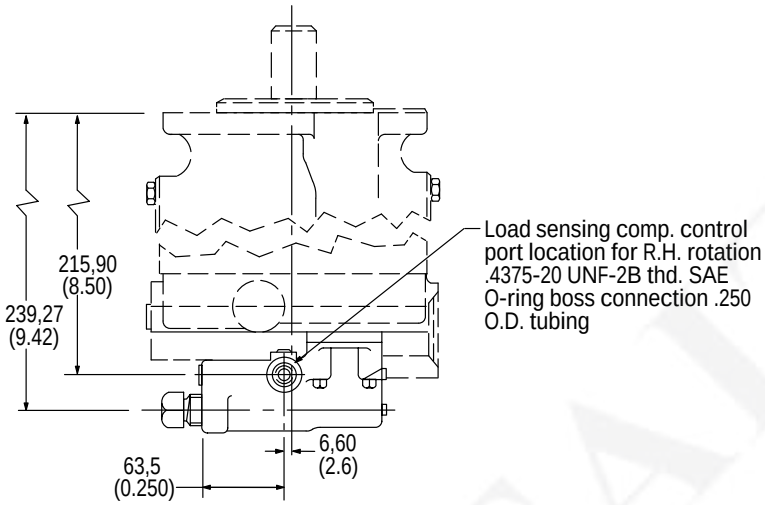

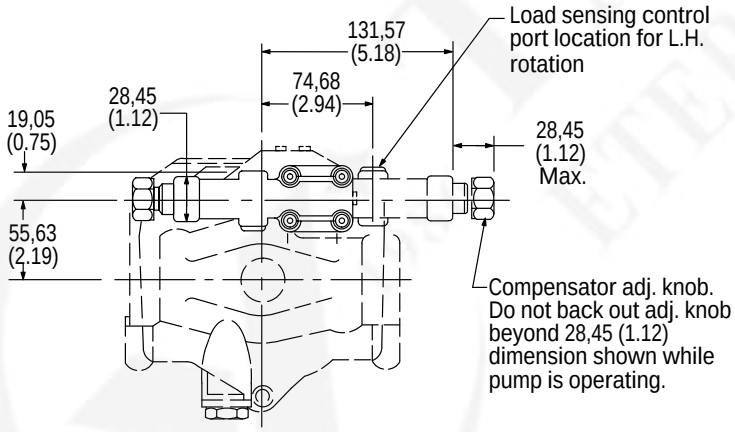

Remote Control

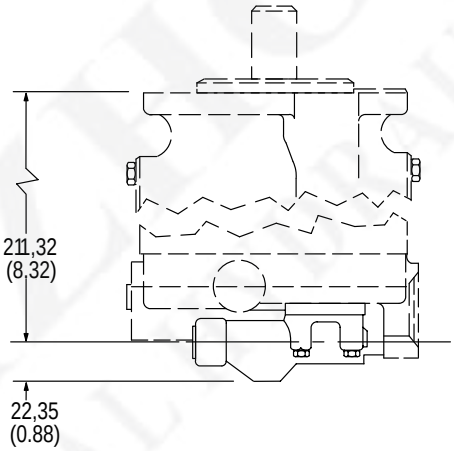

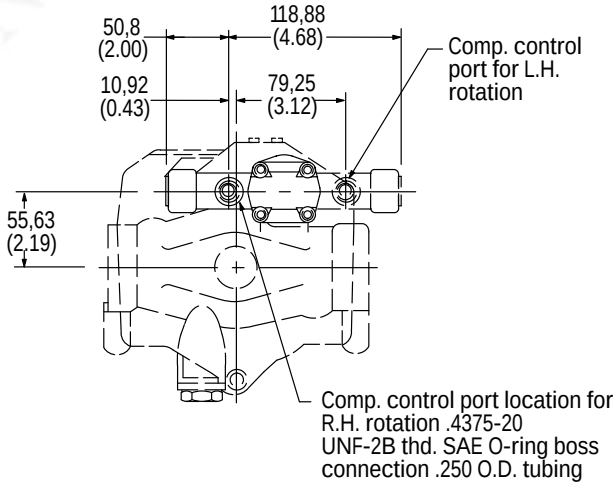

Controls

Pressure Compensator Control with Adjustable Maximum Displacement Stop

Adjustment

Loosen locknut on adjusting rod. Turn adjusting rod clockwise (CW) to decrease maximum pump delivery or counter-clockwise (CCW) to increase maximum pump delivery until desired setting is obtained. Secure this setting by tightening locknut. To assist initial priming, manual adjustment control setting must be at least 40% of maximum flow position.

This control enables the maximum pump delivery to be externally adjusted from 25% to 100% while maintaining all of the standard features of a pressure compensated pump.

Note: Not available with thru-drive models.

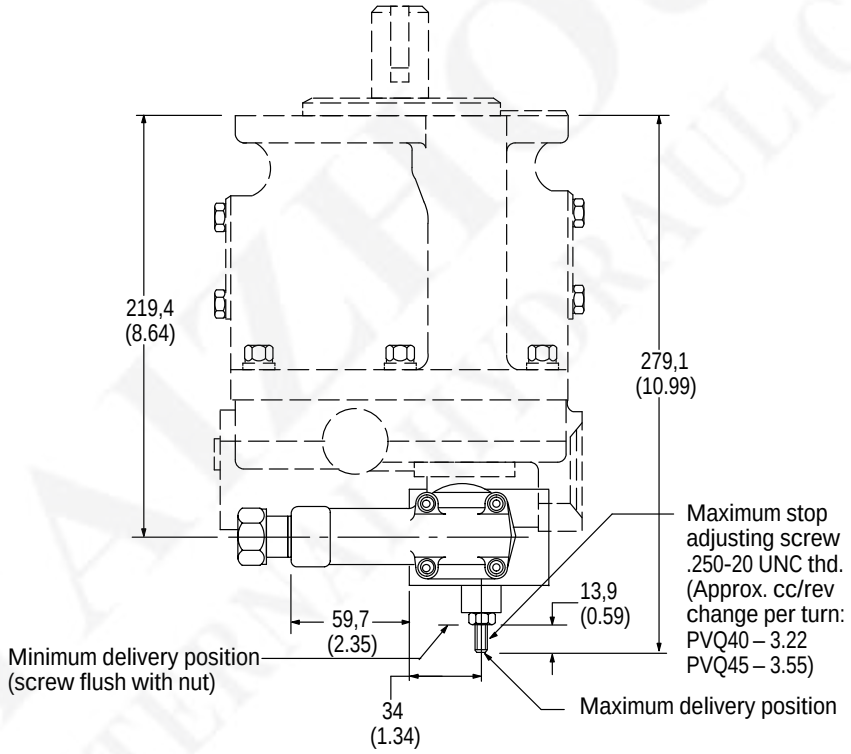

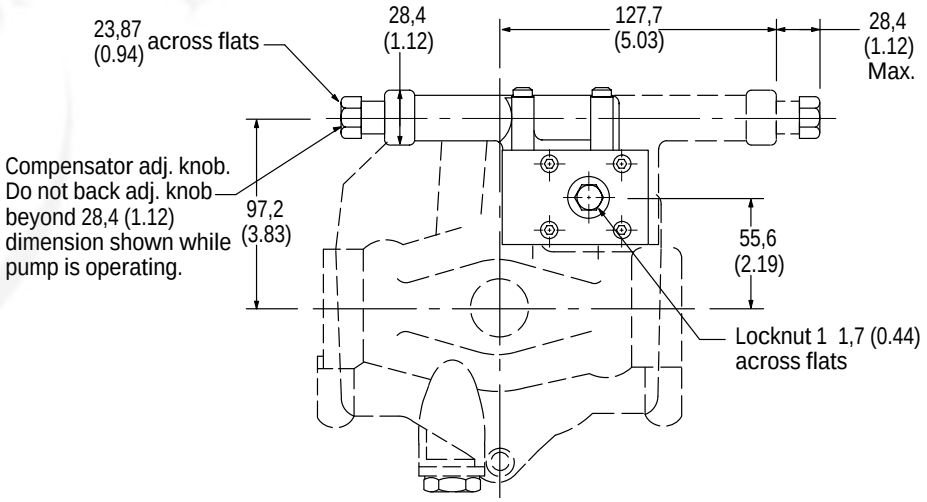

Controls

Electric Dual Range Pressure Compensator with Maximum Displacement Stop

See preceding page and following page for adjustment procedures.

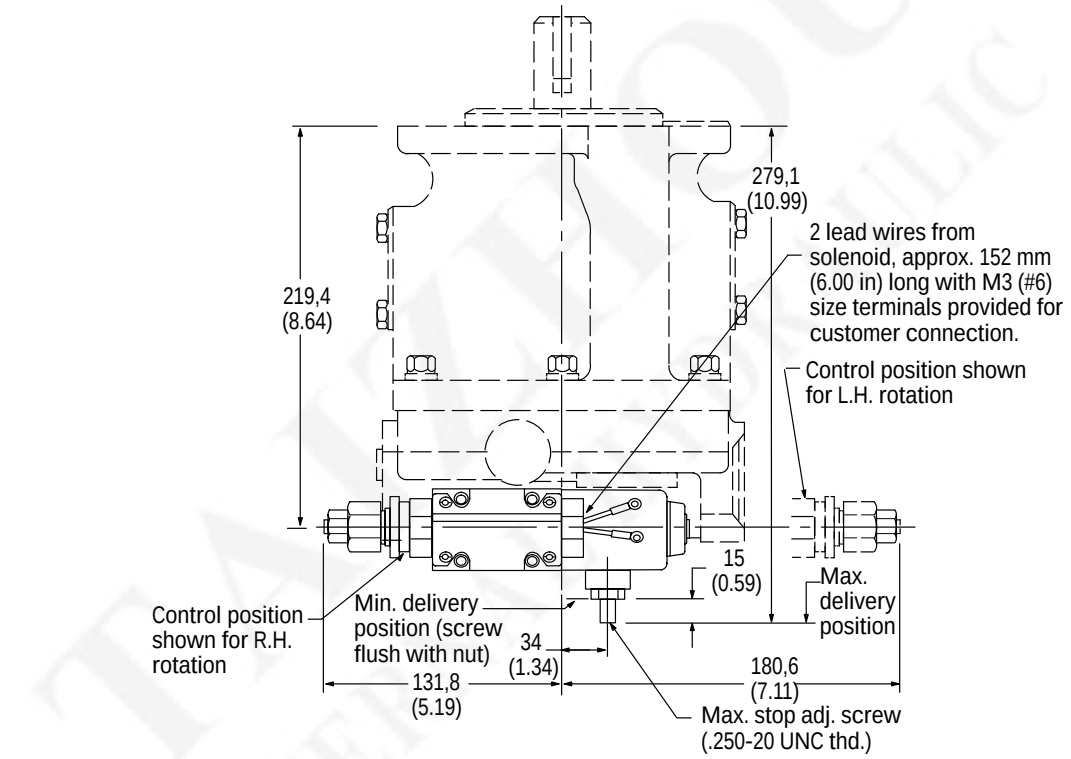

Solenoid Data[u] (110V AC 50 Hz and 115/120V AC 60 Hz)

Solenoid current	Inrush amps (R.M.S.)	Holding amps
115/120V AC 60 Hz - 110V AC 50 Hz	2.0	.54 .64*

*Maximum peak inrush amps approximately 1.4 x R.M.S. value shown.

Refer to catalog GB-C-2015B for additional solenoid valve data.

[u]**Note:** Any sliding spool valve, if held shifted under pressure for long periods of time, may stick and not spring return due to fluid residue formation and, therefore, should be cycled periodically to prevent this from happening.

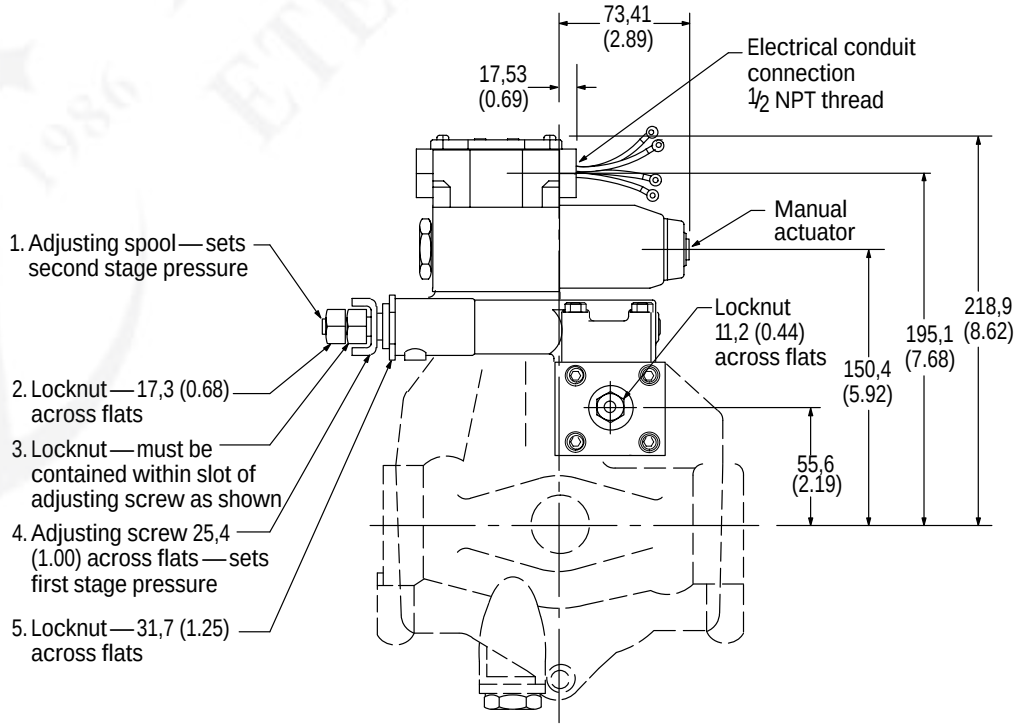

Controls

Electric Dual Range Pressure Compensator Control

Adjustment

1. With the directional valve de-energized, loosen locknut "5" and turn the adjusting screw "4" to the desired first stage pressure setting, then tighten locknut "5".
2. With solenoid de-energized, turn adjusting spool "1" counterclockwise (CCW) until nut "3" is bottomed in adjusting screw slot. (Second stage setting is now equal to first stage pressure setting.) Turn adjusting spool clockwise (CW) to desired second stage pressure requirements. One complete turn of adjusting spool equals approximately 41 bar (600 psi). Energize solenoid and check pressure setting.
   De-energize solenoid and re-adjust if necessary. Secure this setting by tightening locknut "2".

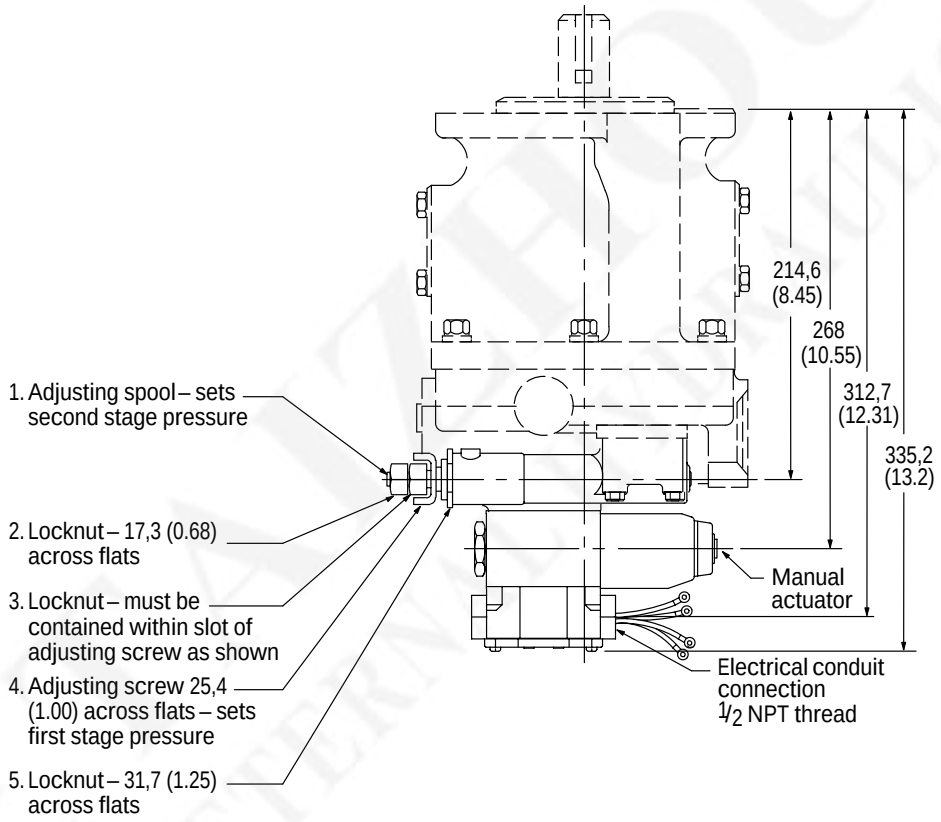

Solenoid Data[u] (110V AC 50 Hz and 115/120V AC 60 Hz)

Solenoid current	Inrush amps (R.M.S.)	Holding amps
115/120V AC 60 Hz - 110V AC 50 Hz	2.0	.54 .64*

*Maximum peak inrush amps approximately 1.4 x R.M.S. value shown.

Refer to catalog GB-C-2015B for additional solenoid valve data.

[u]**Note:** Any sliding spool valve, if held shifted under pressure for long periods of time, may stick and not spring return due to fluid residue formation and, therefore, should be cycled periodically to prevent this from happening.

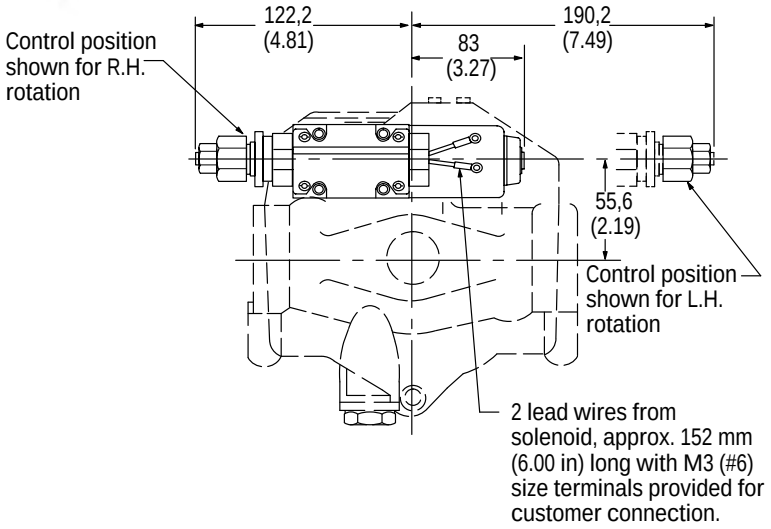

Controls

Unloading Valve Control – "E" Option

With the unloading valve control the variable pump will unload at a preset pressure. The pump will maintain this no flow, low pressure (approximately 14 bar [200 psi]) standby condition, until system pressure drops to about 85% of the preset unloading pressure. The pump will then return on stroke and provide full flow until the preset unloading pressure is reached again.

With this control, an efficient accumulator charging circuit is obtained. The pump will provide full flow to fill the accumulator until the maximum charging pressure is reached. The pump then goes to a standby condition until the accumulator pressure drops to 85% of the desired maximum. The accumulator is then recharged as the cycle starts over again.

A separate right angle check valve must be provided to maintain the accumulator hydraulic charge and prevent back flow when the pump is unloaded. The check valve's internal leakage must not exceed five drops per minute. The control port must be connected to system pressure, downstream of the check valve.

Adjustment range

PVQ40	100-210 bar (1500-3000 psi)
PVQ45	100-186 bar (1500-2700 psi)

Cut-in pressure is 85% of unloading pressure, minimum.

Setting Pressures

1. Back out accumulator unloading pressure adjustment screw to below desired unloading pressure.
2. Adjust desired standby pressure.
3. Set accumulator pressure by screwing in the accumulator unloading adjustment screw. Accumulator recharge (cut-in) pressure is a function of the maximum accumulator pressure and is not adjustable.
4. Check pressure settings and re-adjust if necessary.

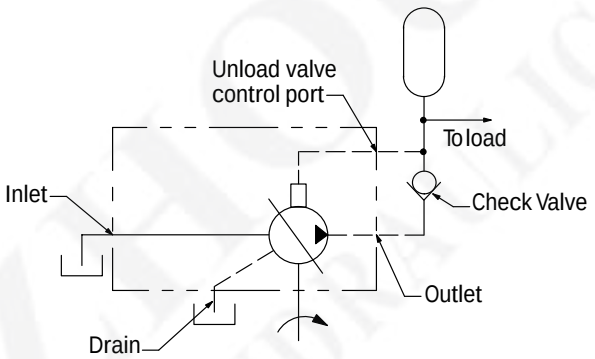

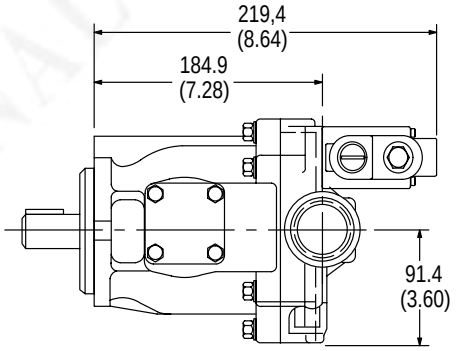

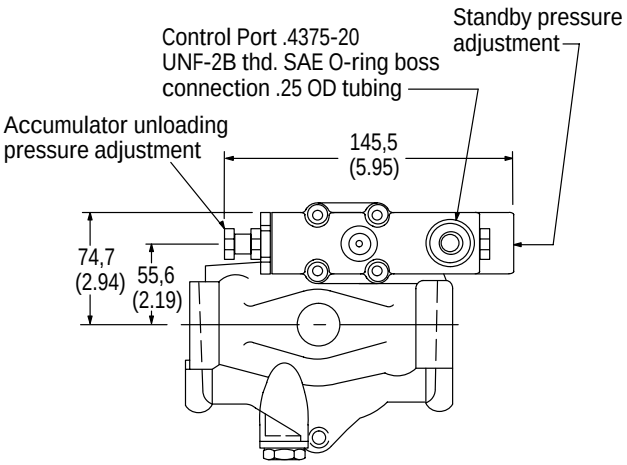

Thru-drives

PVQ40 and PVQ45 SAE “A”

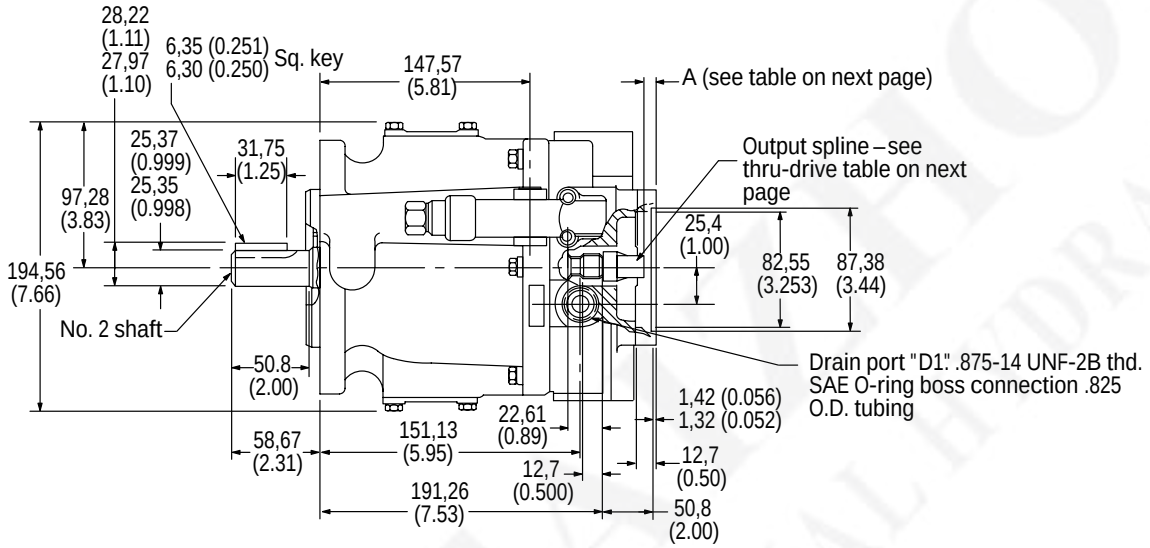

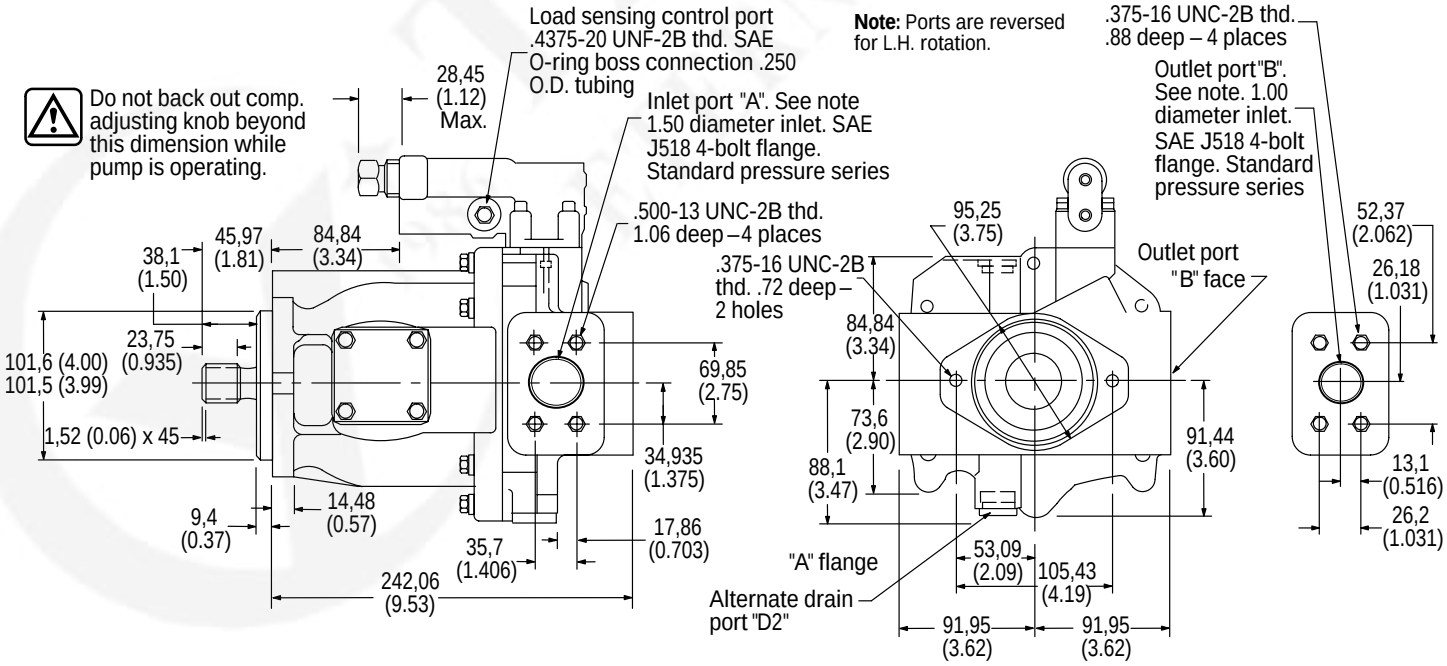

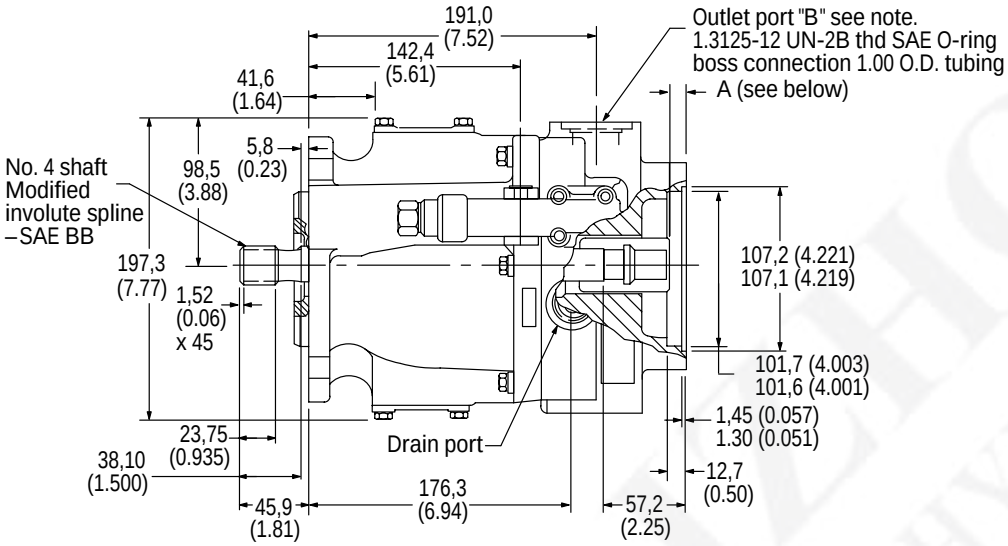

Donot back out comp. adjusting knob beyond this dimension while pump is operating.

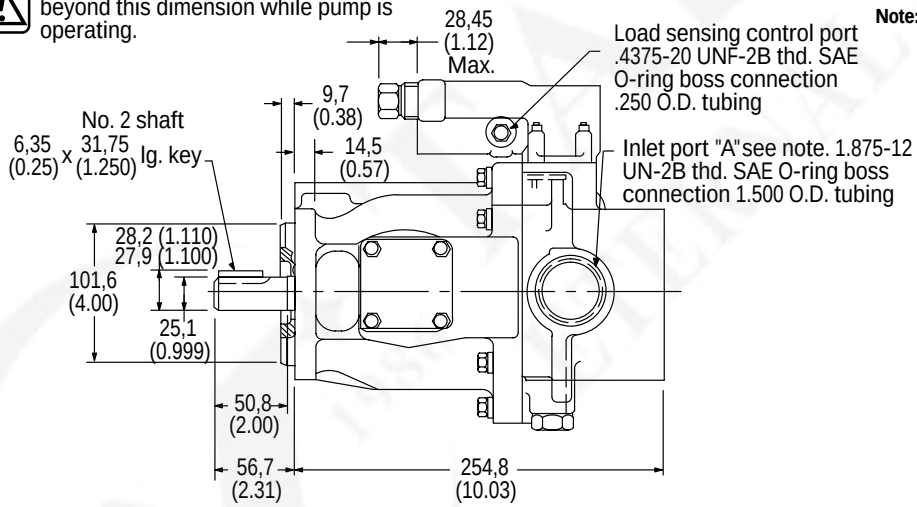

Note: Ports are reversed for L.H. rotation.

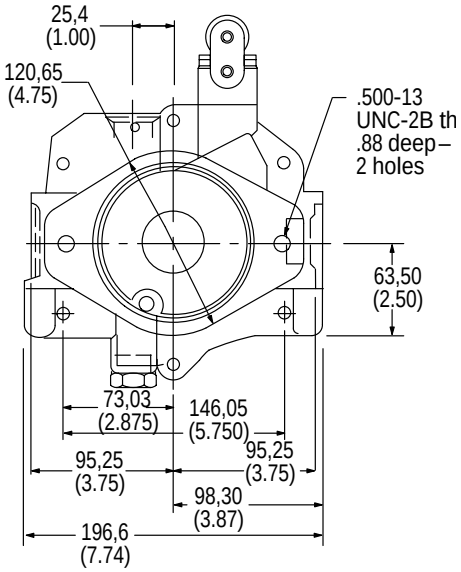

Thru-drive Shaft	Spline Data	Max. Torque Nm (in. lb.)	Dimension A mm (in.)	Coupling Type	Thru-drive Coupling
AA	ASA B5.15-1960 9 teeth 16/32 DP Flat root side fit	58 (517)	10,92 (0.43)	9T/9T	864224
AB	ANS B92.1-1970 11 teeth 16/32 DP Flat root side fit	118 (1050)	12,57 (0.495)	11T/11T	864325
AE	Special Eaton 26 teeth 32/64 DP Flat root side fit	179 (1587)	24,89 (0.98)	26T/26T	627168
			10,92 (0.43)	26T/13T	864307
			20,56 (0.81)	26T/15T	475134

Note: Coupling, screws, and washers must be ordered separately to mount rear pump. "A" O-ring (AS568-042) and "B" O-ring (AS568-155) are included with each thru-drive pump. Couplings for "B26" are step type for 13 and 15 tooth as shown.

Thru-drives Shaft Torque Data PVQ40/45

THRU-DRIVE SHAFT TORQUE DATA

Shaft	Input Shaft Code	Maximum Input Torque Total Nm (lb. in.)	Maximum Thru-drive Torque Output Nm (lb. in.)
9T	2	215 (1900)	58 (517)
	5	208 (1850)	
	8	337 (2987)	
11T	2	215 (1900)	123 (1100)
	5	208 (1850)	
	8	337 (2987)	
26T	2	215 (1900)	179 (1587)
	5	208 (1850)	
	8	337 (2987)	

Note: Both input and output limits must be met.

Typical Rear Pumps (with Shaft Codes) for PVQ40/45 Thru-drives

TYPICAL REAR PUMPS (WITH SHAFT CODES) FOR PVQ40/45 THRU-DRIVES

Thru-drive shaft	Typical Rear Pump	Rear Pump Shaft Code	Thru-drive Coupling
9T	PVQ10/13	3	864224
	PVB5/6	S124 suffix	
	V10	11	
	V20	62	
26T	PVE012	2	864307
		28	627168
	PVQ20/32	3	864307
		28	627168
	PVQ40/45	3	864307
		4	475134
		28	627168
	V2010 OR V2020	11	864307
	20V	151	864307
	2520V	166	475134

Note: 11T (not listed above) is intended for special application only.

Thru-drives

PVQ40 and PVQ45 Pump Support Bracket
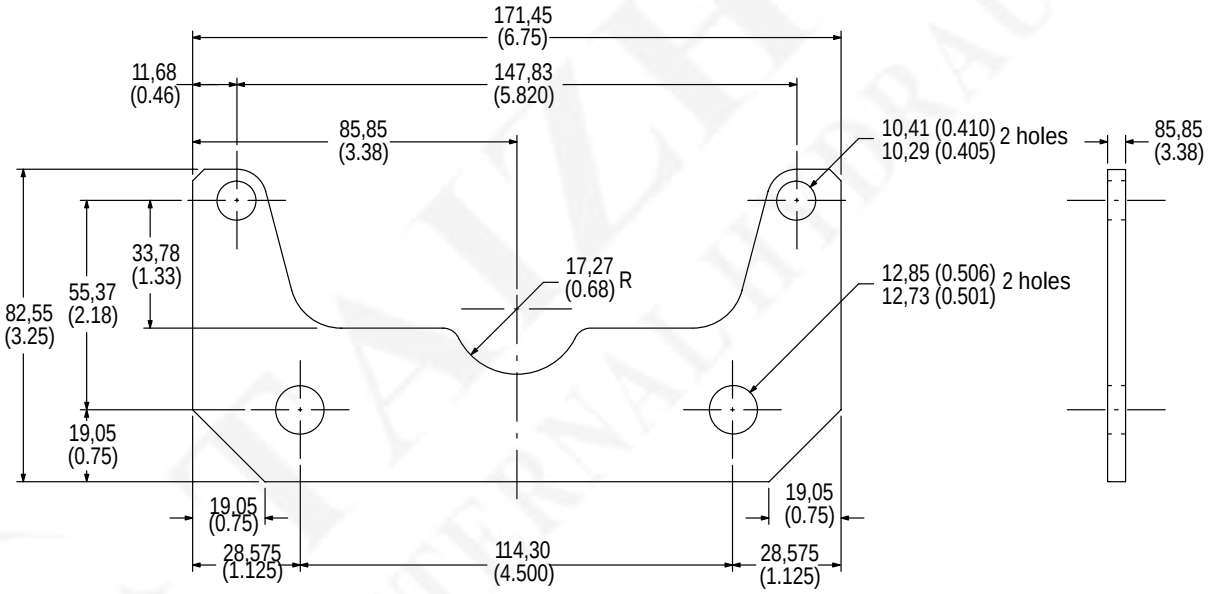
An optional support bracket should be used when a heavy second pump is mounted to a thru-drive PVQ40 or PVQ45. The support bracket (627179), two screws (199740), and two washers (427700) must be ordered separately.