TAIZHOU
ETERNAL HYDRAULIC

Series 90 Axial Piston Pumps

Technical Information

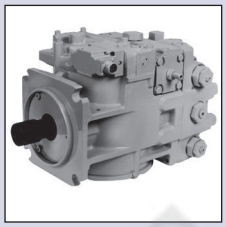

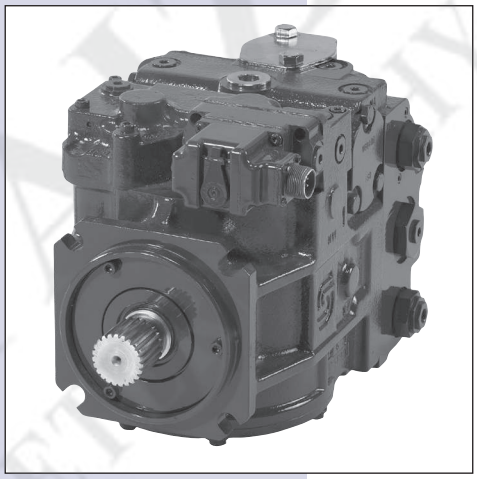

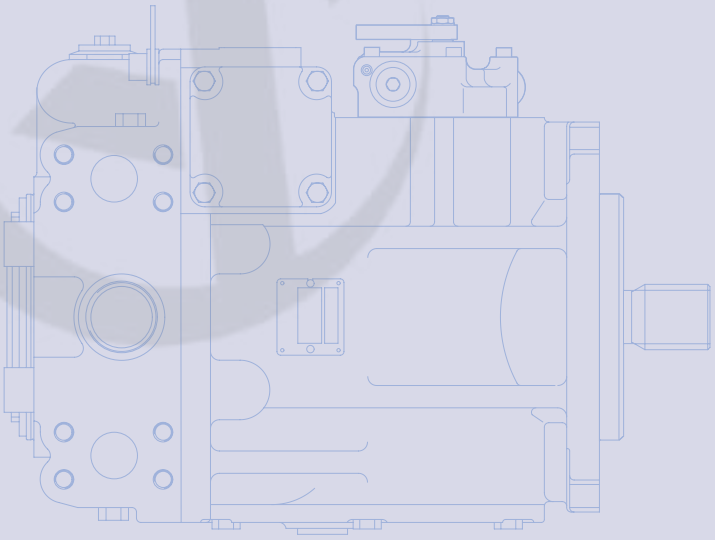

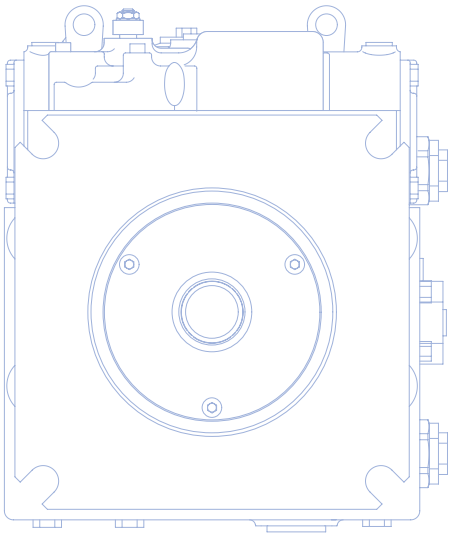

History of Revisions

Table of Revisions

Date	Page	Changed	Rev.
April 2013	42-43	correct shaft torque rating information	GF
March 2013	42	corrections to nut torque for tapered shaft	GE
February 2013	71	Update dimension for Port N - speed sensor port	GD
April 2012	various	edits to the specifications, and model code, other edits	GC
July 2011	35	Typo, 45cc should be 42cc	GB
July 2011	all	Major update	GA
August 2010	last	new back page	FF
March 2010	Various	Fix O-ring dimensions in dimension drawings	FE
December 2009	Various	42cc not available in North America	FD
August 2008	8	130 frame size case drain port changed to 1 5/16-12	FC
July 2007	Various	Minor edits and dimension changes	FB
March 2004	-	Revision F	F

General Description

Series 90 Family of Pumps and Motors....5
PLUS+1 Compliant Controls and Sensors....5
Design....6
Pictorial Circuit Diagram....7
System schematic....7

Technical Specifications

General Specifications....8
Features and Options....8
Operating Parameters....9
Fluid Specifications....9

Operating Parameters

Overview....10
Input Speed....10
Independant Braking System....10
System Pressure....10
Servo Pressure....11
Charge Pressure....11
Case Pressure....12
External Shaft Seal Pressure....12
Temperature and Viscosity....12

System Design Parameters

Filtration System....13
Filtration Options....14
Suction filtration – Option S....14
Fluid Selection....15
Reservoir....15
Case Drain....15
Pump Life....16
Charge Pump....16
Bearing Loads and Life....17
Understanding and Minimizing System Noise....18
Sizing Equations....18
Mounting Flange Loads....19

Master Model Code

Series 90 Master Model Code....21

Control Options

3-Position (FNR) Electric Control - DC, DD....26
Electric Displacement Control (EDC), Options KA, KP, KT....27
Manual Over Ride (MOR)....30
Hydraulic Displacement Control (HDC) ,
Option HF....31
Manual Displacement Control (MDC), Options MA, MB....33
MDC with Neutral Start Switch (NSS)....34
Non Feedback Proportional Electric Control (NFPE)....35

Features and Options

Multi-Function Valves 37
Overpressure protection 37
Pressure limiting function 37
Bypass Function 38
Auxiliary Mounting Pads 39
Mating pump requirements 39
Displacement Limiter 40
Shaft Torque 41
Shaft Availability and Torque Ratings 41
Charge Pump 44
Charge pump sizing/selection 44
Speed Sensor 46
Connector Pin Assignments 47

Installation Drawings

Frame Size 042 48
Frame Size 055 51
Frame Size 075 55
Frame Size 075 NFPE 59
Options FK, FL, FM, FN 59
Frame Size 100 63
Frame Size 130 68
Frame Size 180 72
Frame Size 250 77
Cover Plate 81
3-Position (F-N-R) Electric Control 81
Electric Displacement Control (EDC) with MS-Connector or Packard® connector 82
Hydraulic Displacement Control (HDC) 82
Manual Displacement Control (MDC) with neutral start switch 83
Electrohydraulic Displacement Control (NFPE)
(except 075 NFPE) 84
Integral Pressure Filter 85
Remote pressure – without filter 85

Series 90 Family of Pumps and Motors

Series 90 hydrostatic pumps and motors can be applied together or combined with other products in a system to transfer and control hydraulic power. They are intended for closed circuit applications.

- Series 90 – advanced technology
- Seven sizes of variable displacement pumps
- Proven reliability and performance
- Compact, lightweight
- Worldwide sales and service
- PLUS+1™ compliant controls and sensors

Series 90 variable displacement pumps are compact, high power density units. All models utilize the parallel axial piston/slipper concept in conjunction with a tiltable swashplate to vary the pump's displacement. Reversing the angle of the swashplate reverses the flow of oil from the pump and thus reverses the direction of rotation of the motor output.

Series 90 pumps include an integral charge pump to provide system replenishing
and cooling oil flow, as well as control fluid flow. They also feature a range of auxiliary mounting pads to accept auxiliary hydraulic pumps for use in complementary hydraulic systems. A complete family of control options is available to suit a variety of control systems (mechanical, hydraulic, electric).

Series 90 motors also use the parallel axial piston/slipper design in conjunction with a fixed or tiltable swashplate. They can intake/discharge fluid through either port; they are bidirectional. They also include an optional loop flushing feature that provides additional cooling and cleaning of fluid in the working loop. For more information on Series 90 motors, refer to *Series 90 Motors Technical Information* **520L0604**.

PLUS+1 Compliant Controls and Sensors

A wide range of Series 90 controls and sensors are PLUS+1™ compliant. PLUS+1 compliance means our controls and sensors are directly compatible with the PLUS+1 machine control architecture. Adding Series 90 pumps to your application using PLUS+1 GUIDE software is as easy as drag-and-drop. Software development that used to take months can now be done in just a few hours.

Series 90 pumps can be used together in combination with other pumps and motors in the overall hydraulic system. Our hydrostatic products are designed with many different displacement, pressure and load-life capabilities.
Go to our website or applicable product catalog to choose the components that are right for your complete closed circuit hydraulic system.

Design

Series 90 pump cross-section

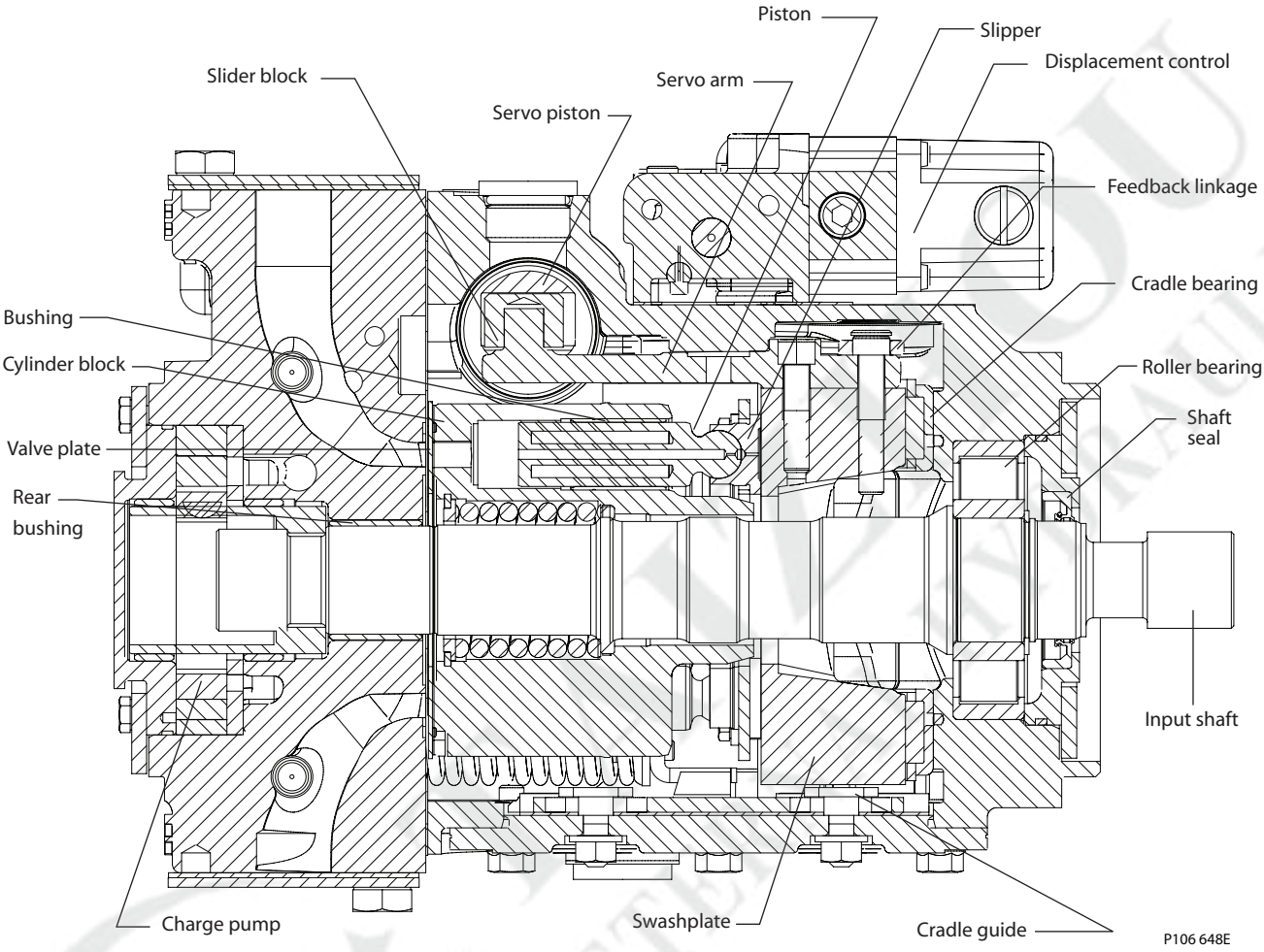

Typical name plate

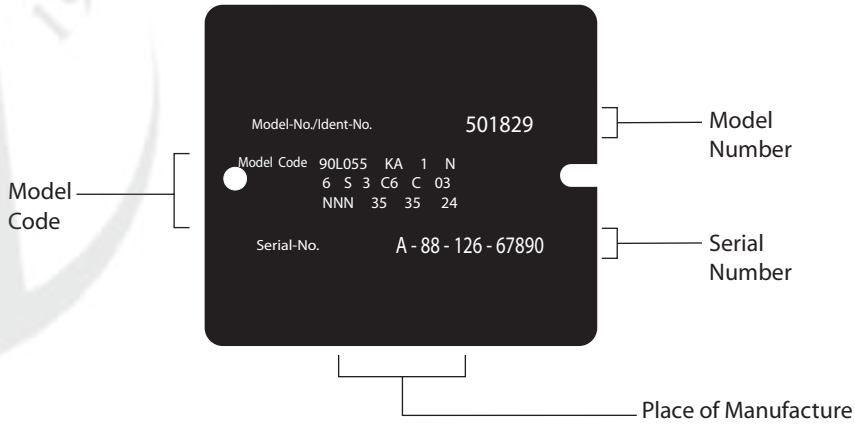

Series 90 pumps are also manufactured in Europe and China. Place of manufacture shown on nameplate will correspond with the actual place of manufacture.

Pictorial Circuit Diagram

This configuration shows a hydrostatic transmission using a Series 90 axial piston variable displacement pump and a Series 90 fixed displacement motor.

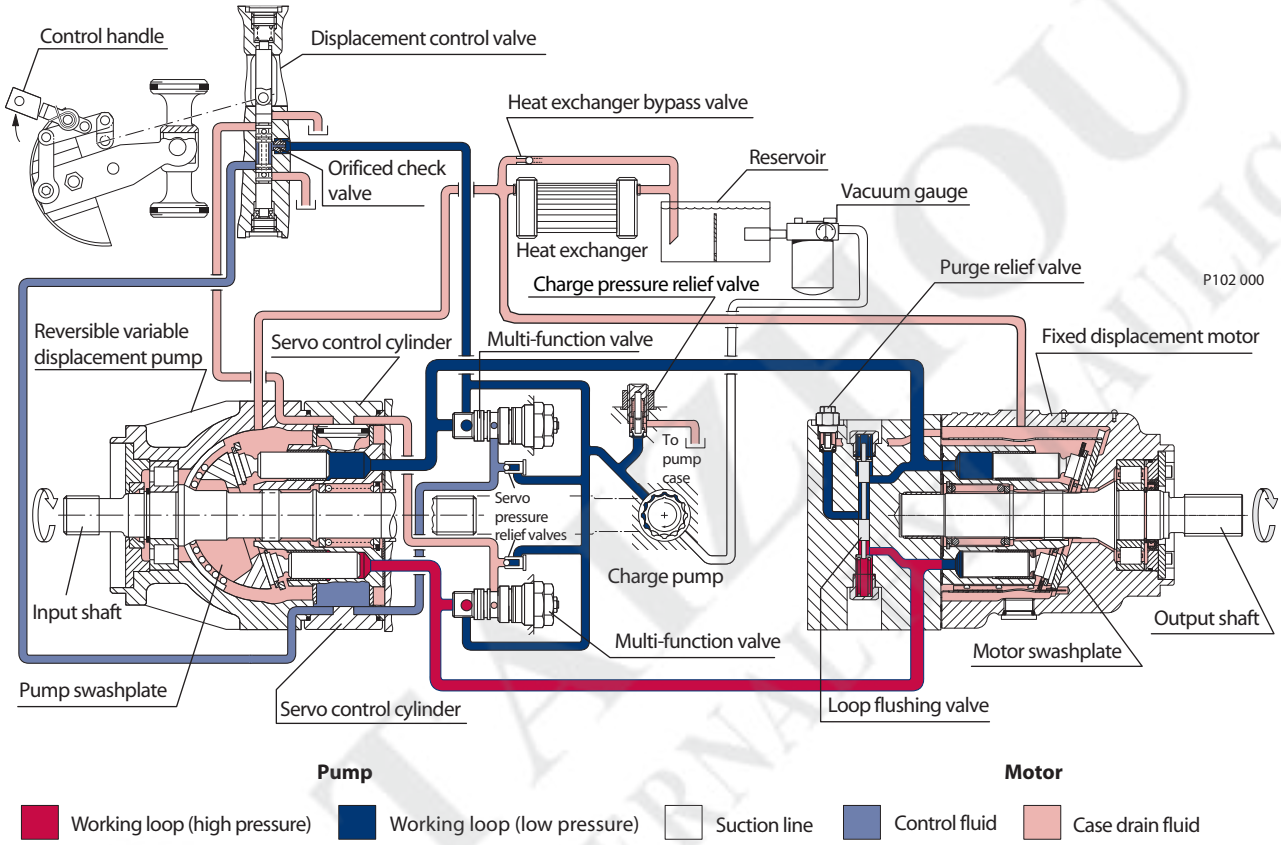

System schematic

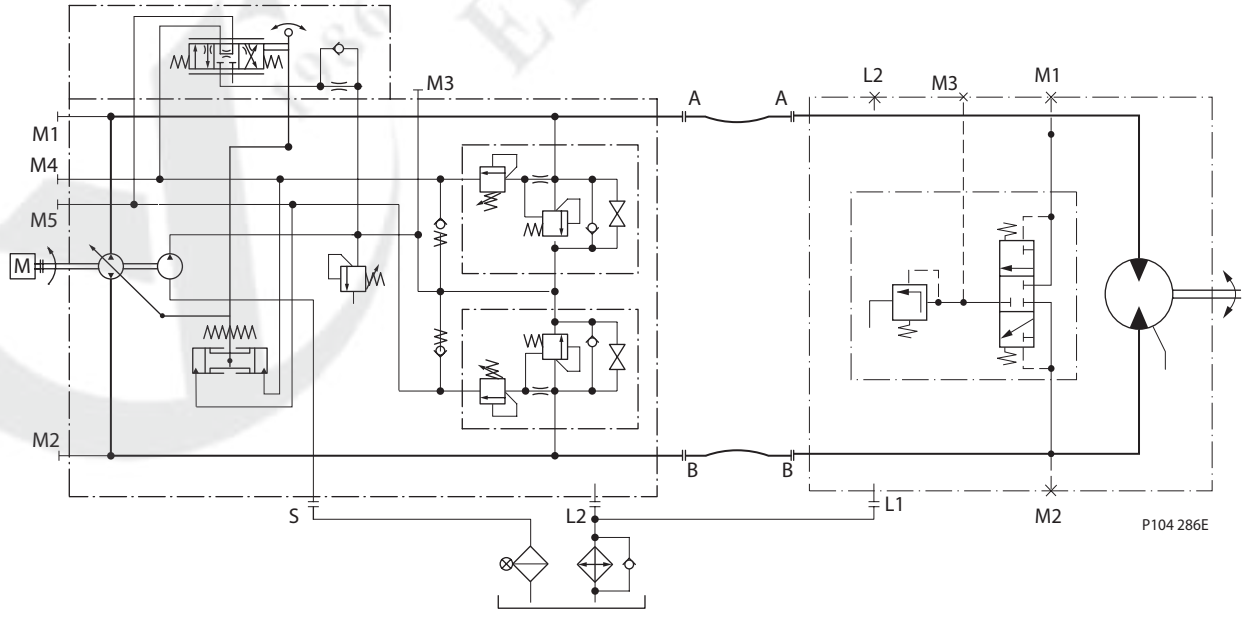

General Specifications

Design	Axial piston pump of cradle swashplate design with variable displacement
Direction of rotation	Clockwise, counterclockwise
Pipe connections	Main pressure ports: ISO split flange boss
	Remaining ports: SAE straight thread O-ring boss
Recommended installation position	Pump installation position is discretionary, however the recommended control position is on the top or at the side, with the top position preferred. Vertical input shaft installation is acceptable. If input shaft is at the top 1 bar case pressure must be maintained during operation. The pump housing must be filled with hydraulic fluid under all conditions; including after a long period of shutdown. Before operating the machine, ensure the pump housing and case drain lines are free of air. Recommended mounting for a multiple pump stack is to arrange the highest power flow towards the input source.
Auxiliary cavity pressure	Will be inlet pressure with internal charge pump. For reference see operating parameter on next page. Will be case pressure with external charge supply. Please verify mating pump shaft seal capability.

Features and Options

		Frame						
Feature	**Unit**	**042**	**055**	**075**	**100**	**130**	**180**	**250**
Displacement	cm³/rev. [in³]/rev.	42 [2.56]	55 [3.35]	75 [4.59]	100 [6.10]	130 [7.93]	180 [10.98]	250 [15.25]
Flow at rated speed (theoretical)	l/min. [US gal/min.]	176 [46]	215 [57]	270 [71]	330 [87]	403 [106]	468 [124]	575 [160]
Torque at maximum displacement (theoretical)	N•m/bar [lbf•in/1000 psi]	0.67 [410]	0.88 [530]	1.19 [730]	1.59 [970]	2.07 [1260]	2.87 [1750]	3.97 [2433]
Mass moment of inertia of rotating components	kg•m² [slug•ft²]	0.0023 [0.0017]	0.0060 [0.0044]	0.0096 [0.0071]	0.0150 [0.0111]	0.023 [0.0170]	0.0380 [0.0280]	0.0650 [0.0479]
Weight (with control opt. MA)	kg [lb]	34 [75]	40 [88]	49 [108]	68 [150]	88 [195]	136 [300]	154 [340]
Mounting (per ISO 3019-1)		Flange 102-2 (SAE B)	Flange 127-4 (SAE C)			Flange 152-4 (SAE D)	Flange 165-4 (SAE E)	
Rotation		Right hand or Left hand rotation						
Main ports: 4-bolt split-flange (per SAE J518 code 62)	mm [in]	19.05 [0.75]	25.4 [1.0]	25.4 [1.0]	25.4 [1.0]	31.75 [1.25]	31.75 [1.25]	38.1 [1.5]
Main port configuration		Twin port	Twin or side port			Twin port		
Case drain ports (SAE O-ring boss)	UNF thread (in.)	0.875–14	1.0625–12	1.0625–12	1.0625–12	1.3125–12	1.625–12	1.625–12
Other ports		SAE O-ring boss						
Shafts		Splined, and tapered shafts available						
Auxiliary mounting		SAE-A, B, C				SAE-A, B, C, D	SAE-A, B, C, D, E	

Operating Parameters

Parameter	Unit	Frame 042	055	075	100	130	180	250
Input speed								
Minimum	min^{-1}(rpm)	500	500	500	500	500	500	500
Rated Speed		4200	3900	3600	3300	3100	2600	2300
Maximum		4600	4250	3950	3650	3400	2850	2500

Operating parameters

System pressure	Maximum working pressure	bar	[psi]	450	[6525]
	Maximum pressure			480	[6960]
	Maximum low loop			45	[650]
	Minimum low loop pressure			10	[145]
Charge pressure	Minimum	bar	[psi]	18	[261]
	Maximum			34	[493]
Control pressure	Minimum (at corner power for EDC and FNR)	bar	[psi]	14	[203]
	Minimum (at corner power for NFPE)			22	[319]
	Maximum			40	[580]
Charge pump inlet pressure	Rated	bar (absolute)	[in Hg vacuum]	0.7	[9]
	Minimum (cold start)			0.2	[24]
	Maximum	bar	[psi]	4.0	[58]
Case pressure	Rated	bar	[psi]	3.0	[44]
	Maximum			5.0	[73]
Lip seal external pressure	Maximum	bar	[psi]	0.4	[5.8}

Fluid Specifications

Feature		Unit			
Viscosity	Intermittent [1]	mm^2/s	[SUS]	5	[42]
	Minimum			7	[49]
	Recommended range			12-80	[66-370]
	Maximum			1600	[7500]
Temperature range [2]	Minimum (cold start) [3]	°C	[°F]	-40	[-40]
	Recommended range			60-85	[140-185]
	Rated			104	[220]
	Maximum intermittent [1]			115	[240]
Filtration (recommended minimum)	Cleanliness per ISO 4406-1999			22/18/13	
	Efficiency (charge pressure filtration)	β-ratio		$\beta_{15\text{-}20} = 75$ ($\beta_{10} \geq 10$)	
	Efficiency (suction and return line filtration)			$\beta_{35\text{-}45} = 75$ ($\beta_{10} \geq 2$)	
	Recommended inlet screen mesh size	µm		100 – 125	

[1] Intermittent = Short term t < 1min per incident and not exceeding 2 % of duty cycle based load-life
[2] At the hottest point, normally case drain port
[3] Cold start = Short term t < 3min, p ≤ 50 bar [725 psi], n ≤ 1000 min^{-1}(rpm)

T000 129E

Overview

This section defines the operating parameters and limitations for Series 90 pumps with regard to input speeds and pressures. For actual parameters, refer to the Operating parameters for each displacement.

Input Speed

Minimum speed is the lowest input speed recommended during engine idle condition. Operating below minimum speed limits the pump's ability to maintain adequate flow for lubrication and power transmission.

Rated speed is the highest input speed recommended at full power condition. Operating at or below this speed should yield satisfactory product life.

Maximum speed is the highest operating speed permitted. Exceeding maximum speed reduces product life and can cause loss of hydrostatic power and braking capacity. Never exceed the maximum speed limit under any operating conditions.

Operating conditions between Rated speed and Maximum speed should be restricted to less than full power and to limited periods of time. For most drive systems, maximum unit speed occurs during downhill braking or negative power conditions.

For more information consult *Pressure and Speed Limits*, **BLN-9884**, when determining speed limits for a particular application.

During hydraulic braking and downhill conditions, the prime mover must be capable of providing sufficient braking torque in order to avoid pump over speed. This is especially important to consider for turbocharged and Tier 4 engines.

Independant Braking System

⚠ Warning

Unintended vehicle or machine movement hazard

Exceeding maximum speed may cause a loss of hydrostatic drive line power and braking capacity. You must provide an independant braking system, redundant to the hydrostatic transmission, sufficient to stop and hold the vehicle or machine in the event of hydrostatic drive power loss. The braking system must also be sufficient to hold the machine in place when full power is applied.

System Pressure

System pressure is the differential pressure between high pressure system ports. It is the dominant operating variable affecting hydraulic unit life. High system pressure, which results from high load, reduces expected life. Hydraulic unit life depends on the speed and normal operating, or weighted average, pressure that can only be determined from a duty cycle analysis.

Application pressure is the high pressure relief or pressure limiter setting normally defined within the order code of the pump. This is the applied system pressure at which the drive-line generates the maximum calculated pull or torque in the application.

Maximum working pressure is the highest recommended Application pressure. Maximum working pressure is not intended to be a continuous pressure. Propel systems with application pressures at, or below, this pressure should yield satisfactory unit life given proper component sizing.

System Pressure (continued)

Maximum pressure is the highest allowable Application pressure under any circumstance. Application pressures above maximum working Pressure will only be considered with duty cycle analysis and factory approval.

Pressure spikes are normal and must be considered when reviewing maximum working pressure.

Minimum low loop pressure must be maintained under all operating conditions to avoid cavitation.

All pressure limits are differential pressures referenced to low loop (charge) pressure. Subtract low loop pressure from gauge readings to compute the differential.

Servo Pressure

Servo pressure is the pressure in the Servo-system needed to position and hold the pump on stroke. It depends on system pressure and speed.

At **minimum** servo pressure the pump will run at reduced stroke depending on speed and pressure.

Minimum servo pressure at corner power holds the pump on full stroke at max speed and max pressure.

Maximum servo pressure is the highest pressure typically given by the charge pressure setting.

Charge Pressure

An internal charge relief valve regulates charge pressure. Charge pressure supplies the control with pressure to operate the swashplate and to maintain a minimum pressure in the low side of the transmission loop. The charge pressure setting listed in the order code is the set pressure of the charge relief valve with the pump in neutral, operating at 1800 min-1 [rpm], and with a fluid viscosity of 32 mm2/s [150 SUS]. Pumps configured with no charge pump (external charge supply) are set with a charge flow of 30 l/min. [7.93 US gal/min.] and a fluid viscosity of 32 mm2/s [150 SUS].
The charge pressure setting is referenced to case pressure. Charge pressure is the differential pressure above case pressure.

Minimum charge pressure is the lowest pressure allowed to maintain a safe working condition in the low side of the loop. Minimum control pressure requirements are a function of speed, pressure, and swashplate angle, and may be higher than the minimum charge pressure shown in the Operating parameters tables.

Maximum charge pressure is the highest charge pressure allowed by the charge relief adjustment, and which provides normal component life. Elevated charge pressure can be used as a secondary means to reduce the swashplate response time.

At normal operating temperature charge inlet pressure must not fall below **rated charge inlet pressure (vacuum)**.

Minimum charge inlet pressure is only allowed at cold start conditions. In some applications it is recommended to warm up the fluid (e.g. in the tank) before starting the engine and then run the engine at limited speed.

Maximum charge pump inlet pressure may be applied continuously.

Operating Parameters

Case Pressure

Under normal operating conditions, the **rated case pressure** must not be exceeded. During cold start case pressure must be kept below maximum intermittent case pressure. Size drain plumbing accordingly.

Auxiliary Pad Mounted Pumps. The auxiliary pad cavity of S90 pumps configured without integral charge pumps is referenced to case pressure. Units with integral charge pumps have auxiliary mounting pad cavities referenced to charge inlet (vacuum).

Caution

Possible component damage or leakage

Operation with case pressure in excess of stated limits may damage seals, gaskets, and/or housings, causing external leakage. Performance may also be affected since charge and system pressure are additive to case pressure.

External Shaft Seal Pressure

In certain applications the input shaft seal may be exposed to external pressure. In order to prevent damage to the shaft seal the maximum differential pressure from external sources must not exceed 0.4 bar (5.8 psi) over pump case pressure. The case pressure limits of the pump must also be followed to ensure the shaft seal is not damaged.

Caution

Regardless of the differential pressure across the shaft seal, the shaft seal has been known to pump oil from the external source (e. g. gear box) into the pump case.

Temperature and Viscosity

Temperature

The high temperature limits apply at the hottest point in the transmission, which is normally the motor case drain. The system should generally be run at or below the quoted **rated temperature**.

The **maximum intermittent temperature** is based on material properties and should never be exceeded.

Cold oil will generally not affect the durability of the transmission components, but it may affect the ability of oil to flow and transmit power; therefore temperatures should remain 16 °C [30 °F] above the pour point of the hydraulic fluid.

The **minimum temperature** relates to the physical properties of component materials. Size heat exchangers to keep the fluid within these limits. We recommends testing to verify that these temperature limits are not exceeded.

Viscosity

For maximum efficiency and bearing life, ensure the fluid viscosity remains in the **recommended range**.

The **minimum viscosity** should be encountered only during brief occasions of maximum ambient temperature and severe duty cycle operation.
The **maximum viscosity** should be encountered only at cold start.

Filtration System

To prevent premature wear, ensure only clean fluid enters the hydrostatic transmission circuit. A filter capable of controlling the fluid cleanliness to ISO 4406 class 22/18/13 (SAE J1165) or better, under normal operating conditions, is recommended.
These cleanliness levels can not be applied for hydraulic fluid residing in the component housing/case or any other cavity after transport.

The filter may be located on the pump (integral) or in another location (remote).
The integral filter has a filter bypass sensor to signal the machine operator when the filter requires changing. Filtration strategies include suction or pressure filtration. The selection of a filter depends on a number of factors including the contaminant ingression rate, the generation of contaminants in the system, the required fluid cleanliness, and the desired maintenance interval. Filters are selected to meet the above requirements using rating parameters of efficiency and capacity.

Filter efficiency can be measured with a Beta ratio[1] (β_x). For simple suction-filtered closed circuit transmissions and open circuit transmissions with return line filtration, a filter with a β-ratio within the range of $\beta_{35\text{-}45} = 75$ ($\beta_{10} \geq 2$) or better has been found to be satisfactory. For some open circuit systems, and closed circuits with cylinders being supplied from the same reservoir, a considerably higher filter efficiency is recommended. This also applies to systems with gears or clutches using a common reservoir.
For these systems, a charge pressure or return filtration system with a filter β-ratio in the range of $\beta_{15\text{-}20} = 75$ ($\beta_{10} \geq 10$) or better is typically required.

Because each system is unique, only a thorough testing and evaluation program can fully validate the filtration system. Please see *Design Guidelines for Hydraulic Fluid Cleanliness Technical Information*, **520L0467** for more information.

[1] Filter β_x-ratio is a measure of filter efficiency defined by ISO 4572. It is defined as the ratio of the number of particles greater than a given diameter ("x" in microns) upstream of the filter to the number of these particles downstream of the filter.

Caution Clogged filters can cause cavitation, which damages the charge pump. We recommend a filter bypass with a filter bypass sensor to prevent damage due to blocked suction filters.

Filtration Options

Suction filtration – Option S

The suction filter is placed in the circuit between the reservoir and the inlet to the charge pump, as shown below.

The use of a filter contamination monitor is recommended.

Suction filtration

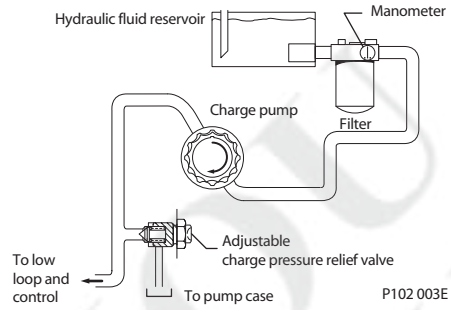

Charge pressure filtration (partial charge pump flow)

Two types of pressure filtration exist for most Series 90 pumps. The two types are: remote pressure filtration (filter remotely mounted on vehicle) and integral pressure filtration (filter mounted to the endcap). Verify option availability in the size specific technical information.
In either case the filtration circuit is the same with the filter element situated in the circuit downstream the charge pump and upstream of the charge relief valve such that full charge flow is continuously filtered, as shown in the accompanying illustrations. Charge pressure filtration can mitigate high inlet vacuum in cold start-ups and provides fluid filtration immediately prior to entrance to the loop and the control system. Pressure filtration provides a higher level of filtering efficiency than suction filtration.

Filters used in charge pressure filtration circuits must be rated to at least 35 bar [508 psi] pressure. A 100 – 125 µm screen located in the reservoir or in the charge inlet line is recommended when using charge pressure filtration.

Technical data according to ISO 16889

Nominal flow at 30mm²/s and ΔP 0.5 bar[7.3 psi] (clean filter element only)		Minimum β-ratio
Short	60 l/min	$\beta_{7.5(C)}=75$ ($\beta_{5(C)} \geq 10$)
Long	105 l/min	

Remote charge pressure filtration

A special adapter head is available to allow for the charge filter to be located conveniently for easy service and replacement. Care should be taken to minimize the hydraulic pressure drops associated with long connecting lines, small diameter hoses, or restrictive port adaptors at the filter head or endcap. Ensure the normal operating pressure drop across the remote filtration in and out ports is sufficiently below the crack pressure setting of the recommended filter bypass valve.

Charge pressure filtration

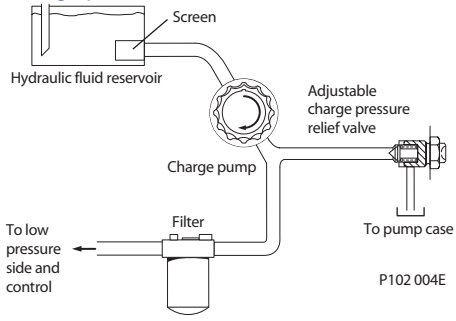

Caution
Remote filter heads without bypass and poor plumbing design can encounter excessive pressure drops that can lead to charge pump damage in addition to contaminants being forced through the filter media and into the transmission loop.

Fluid Selection

Ratings and performance data are based on operating with hydraulic fluids containing oxidation, rust and foam inhibitors. These fluids must possess good thermal and hydrolytic stability to prevent wear, erosion, and corrosion of pump components. Never mix hydraulic fluids of different types.

Fire resistant fluids are also suitable at modified operating conditions. Please see *Hydraulic Fluids and Lubricants Technical Information*, **520L0463**, for more information. Refer to *Experience with Biodegradable Hydraulic Fluids Technical Information*, **520L0465**, for information relating to biodegradable fluids. Cont

Reservoir

The hydrostatic system reservoir should accommodate maximum volume changes during all system operating modes and promote de-aeration of the fluid as it passes through the tank. A suggested minimum total reservoir volume is 5/8 of the maximum charge pump flow per minute with a minimum fluid volume equal to ½ of the maximum charge pump flow per minute. This allows 30 seconds fluid dwell for removing entrained air at the maximum return flow. This is usually adequate to allow for a closed reservoir (no breather) in most applications.

Locate the reservoir outlet (charge pump inlet) above the bottom of the reservoir to take advantage of gravity separation and prevent large foreign particles from entering the charge inlet line. A 100-125 µm screen over the outlet port is recommended. Position the reservoir inlet (fluid return) to discharge below the normal fluid level, toward the interior of the tank. A baffle (or baffles) will further promote de-aeration and reduce surging of the fluid.

Case Drain

All single S90 pumps are equipped with multiple drain ports. Port selection and case drain routing must enable the pump housing to maintain a volume of oil not less than half full and normal operating case pressure limits of the unit are maintained. Case drain routing and design must consider unit case pressure ratings.
A case drain line must be connected to one of the case outlets to return internal leakage to the system reservoir.

Do not over torque the fitting on case drain port L2 (located on the side cover). The proper torque is 100 N•m [74 lbf•ft] maximum. Over torquing the fitting may change the neutral position of the swashplate.

Pump Life

Pump life depends on several factors, such as speed, pressure, and swashplate angle.

Charge Pump

Charge flow is required on all Series 90 pumps applied in closed circuit installations. The charge pump provides flow to make up internal leakage, maintain a positive pressure in the main circuit, provide flow for cooling and filtration, replace any leakage losses from external valving or auxiliary systems, and to provide flow and pressure for the control system.

Many factors influence the charge flow requirements and the resulting charge pump size selection. These factors include system pressure, pump speed, pump swashplate angle, type of fluid, temperature, size of heat exchanger, length and size of hydraulic lines, control response characteristics, auxiliary flow requirements, hydrostatic motor type, etc. When initially sizing and selecting hydrostatic units for an application, it is frequently not possible to have all the information necessary to accurately evaluate all aspects of charge pump size selection.

Unusual application conditions may require a more detailed review of charge pump sizing. Charge pressure must be maintained at a specified level under all operating conditions to prevent damage to the transmission.

Charge pump sizing/selection

In most applications a general guideline is that the charge pump displacement should be at least 10 % of the total displacement of all components in the system. Unusual application conditions may require a more detailed review of charge flow requirements. Refer to *Selection of Drive line Components*, **BLN-9885**, for a detailed procedure.

System features and conditions which may invalidate the 10 % guideline include (but are not limited to):

- Continuous operation at low input speeds (< 1500 min-1 (rpm))
- High shock loading and/or long loop lines
- High flushing flow requirements
- Multiple Low Speed High Torque motors
- High input shaft speeds

Bearing Loads and Life

In vehicle propel drives with no external shaft loads , and where the system pressure and swashplate angle are changing direction and magnitude regularly, the normal L20 bearing life (80% survival) will exceed the hydraulic life of the unit.

In non-propel drives, such as vibratory drives, conveyor drives and fan drives, the operating speed and pressure are often nearly constant and the swashplate angle is predominantly at maximum. These drives have a distinct duty cycle compared to a propulsion drive. In these types of applications, a bearing life review is recommended.

For bearing life, speed, pressure, swashplate angle, plus external loads will be considered. Other factors that affect bearing life include fluid type, viscosity, and cleanliness.

Applications with external shaft loads

External loads are found in applications where the pump is driven with a side/thrust load (belt drive or gear drive) as well as in installations with misalignment and improper concentricity between the pump and drive coupling. All external loads act to reduce bearing life.

In applications where you cannot avoid external radial shaft loads, orient the load to 0° or 180° position. Use tapered output shafts or clamp-type couplings where radial shaft loads are present.
In addition, external thrust loads can reduce bearing life in systems with low delta pressure or in combination with external radial loads/bending moments.

Re = Me / L
Me = Shaft moment
L = Flange distance
Re = External force

Radial load position

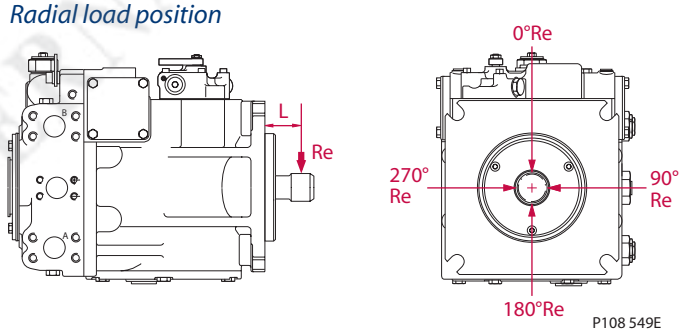

Maximum allowable external shaft load

Parameter	042	055	075	100	130	180	250
External moment (Me) N•m [lbf•in]	126 [1114]	101 [893]	118 [1043]	126 [1114]	140 [1238]	*	*

* no tapered shaft available

If continuous applied external radial loads are 25% of the maximum allowable or more or thrust loads/bending moments known to occur, contact your representative for an evolution of bearing life.

Avoid external thrust loads in either direction.

Understanding and Minimizing System Noise

Noise is transmitted in fluid power systems in two ways: as fluid borne noise, and structure borne noise.

Fluid-borne noise (pressure ripple or pulsation) is created as pumping elements discharge oil into the pump outlet. It is affected by the compressibility of the oil, and the pump's ability to transition pumping elements from high to low pressure. Pulsations travel through the hydraulic lines at the speed of sound (about 1400 m/s [4600 ft/sec] in oil) until there is a change (such as an elbow) in the line. Thus, amplitude varies with overall line length and position.

Structure born noise is transmitted wherever the pump casing connects to the rest of the system. The way system components respond to excitation depends on their size, form, material, and mounting.

System lines and pump mounting can amplify pump noise.

Follow these suggestions to help minimize noise in your application:

- Use flexible hoses.
- Limit system line length.
- If possible, optimize system line position to minimize noise.
- If you must use steel plumbing, clamp the lines.
- If you add additional support, use rubber mounts.
- Test for resonants in the operating range; if possible avoid them.

Sizing Equations

The following equations are helpful when sizing hydraulic pumps. Generally, the sizing process is initiated by an evaluation of the machine system to determine the required motor speed and torque to perform the necessary work function. Refer to *Selection of drive line components*, **BLN-9885**, for a more complete description of hydrostatic drive line sizing. First, the motor is sized to transmit the maximum required torque. The pump is then selected as a flow source to achieve the maximum motor speed.

SI units

Output flow $Q = \frac{V_g \cdot n \cdot \eta_v}{1000}$ (l/min..)

Input torque $M = \frac{V_g \cdot \Delta p}{20 \cdot \pi \cdot \eta_m}$ (N•m)

Input power $P = \frac{M \cdot n \cdot \pi}{30\,000} = \frac{Q \cdot \Delta p}{600 \cdot \eta_t}$ (kW)

V_g = Displacement per revolution (cm^3/rev)
Δp = $p_O - p_i$ (system pressure) (bar)
n = Speed (min^{-1}(rpm))
η_v = Volumetric efficiency
η_m = Mechanical efficiency
η_t = Overall efficiency ($\eta_v \cdot \eta_m$)

US units

Output flow $Q = \frac{V_g \cdot n \cdot \eta_v}{231}$ (US gal/min..)

Input torque $M = \frac{V_g \cdot \Delta p}{2 \cdot \pi \cdot \eta_m}$ (lbf•in)

Input power $P = \frac{M \cdot n \cdot \pi}{198\,000} = \frac{Q \cdot \Delta p}{1714 \cdot \eta_t}$ (hp)

V_g = Displacement per revolution (in^3/rev)
Δp = $p_O - p_i$ (system pressure) (psi)
n = Speed (min^{-1}(rpm))
η_v = Volumetric efficiency
η_m = Mechanical efficiency
η_t = Overall efficiency ($\eta_v \cdot \eta_m$)

Mounting Flange Loads

Adding tandem mounted auxiliary pumps and/or subjecting pumps to high shock loads may result in excessive loading of the mounting flange.
Applications which experience extreme resonant vibrations or shock may require additional pump support. The overhung load moment for multiple pump mounting may be estimated using the formula below.

Overhung load example

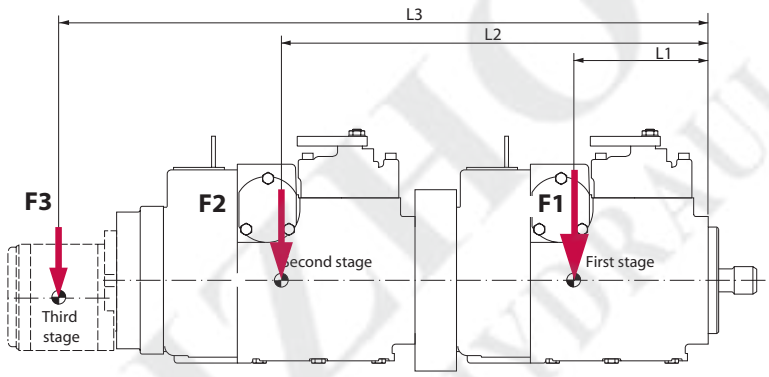

P108 511E

Estimated maximum and rated acceleration factors for some typical applications are shown in the table below.

Estimating overhung load moments

Based on SI units

W = Mass of pump kg
L = Distance from mounting flange to pump center of gravity
(refer to Installation drawings section)

$M_R = g \cdot G_R (W_1L_1 + W_2L_2 + ... + W_nL_n)$
$M_S = g \cdot G_S (W_1L_1 + W_2L_2 + ... + W_nL_n)$

Where:
M_R = Rated load moment N•m
M_S = Shock load moment N•m
g = Gravity 9.81 m/s^2
G_R = Calculation factor for rated (vibratory) acceleration (G's)*
G_S = Calculation factor for maximum shock acceleration (G's)*

Based on US units

W = Weight of pump [lb]
L = Distance from mounting flange [in] to pump center of gravity

$M_R = G_R (W_1L_1 + W_2L_2 + ... + W_nL_n)$
$M_S = G_S (W_1L_1 + W_2L_2 + ... + W_nL_n)$

Where:
M_R = Rated load moment N•m
M_S = Shock load moment N•m

* This factor depends on the application (see next page).

Mounting Flange Loads (continued)

Use these values for a rough load estimation in the absence of specific data.

*Typical **G** loads for various applications*

Application	Calculation factor	
	Rated (vibratory) acceleration G_R	Maximum (shock) acceleration G_S
Skid Steer Loader	8	15-20
Trencher (rubber tires)	3	8
Asphalt Paver	2	6
Windrower	2	5
Aerial Lift	1.5	4
Turf Care Vehicle	1.5	4
Vibratory Roller	6	10

T000 165E

Allowable overhung load moment values are shown in the following table.

Allowable overhung load moments

Frame size	Rated moment (M_R)		Shock load moment (M_S)	
	N•m	lbf•in	N•m	lbf•in
042	860	7600	3020	26 700
055	1580	14 000	5650	50 000
075	1580	14 000	5650	50 000
100	1580	14 000	5650	50 000
130	3160	28 000	10 730	95 000
180	6070	54 000	20 600	182 000
250	6070	54 000	20 600	182 000

Series 90 Master Model Code

	R	Size	M	P	J	G	N	F	L	H	T	W	Y	Z	K
S90															

R	Type and Rotation	042	055	075	100	130	180	250
R	Right Hand [CW]	O	O	O	O	O	O	O
L	Left Hand [CCW]	O	O	O	O	O	O	O

	Size	042	055	075	100	130	180	250
042	42 cc [2.56 in³] max. displacement per revolution	O						
055	55 cc [3.36 in³] max. displacement per revolution		O					
075	75 cc [4.58 in³] max. displacement per revolution			O				
100	100 cc [6.10 in³] max. displacement per revolution				O			
130	130 cc [7.93 in³] max. displacement per revolution					O		
180	180 cc [10.98 in³] max. displacement per revolution						O	
250	250 cc [15.26 in³] max. displacement per revolution							O

M	Controls	042	055	075	100	130	180	250
CA	cover plate without feedback link, no control	O	O	O	O	O	O	
DC	3 positon F-N-R solenoid control (12 V , DC) DIN- connector	O	O	O	O	O	O	
DD	3 positon F-N-R solenoid control (24 V , DC) DIN- connector	O	O	O	O	O	O	O
HF	HDC 2, std. porting, 3,0 - 11 BAR (44 - 160 PSI)	O	O	O	O	O	O	O
KA	EDC, MS connector, std. porting, dual coil (14 - 85 mA)	O	O	O	O	O	O	O
KN	EDC, MS connector, std. porting, 643 Ohm single coil (4 - 20 mA)	O	O	O	O	O	O	O
KT	EDC, Deutsch connector, std porting, dual coil (14 - 85 mA)		O	O	O	O	O	O
KP	EDC, Weatherpack connector, std. porting, dual coil (14 - 85mA)	O	O	O	O	O	O	O
MA	MDC	O	O	O	O	O	O	O
MB	MDC with neutral start switch	O	O	O	O	O	O	O
FA	electrohydraulic displacement control without feedback link, 12V with AMP Minitimer connector, proportional solenoid with pressure reducing valve (25 bar) (NFPE control)	O	O		O			
FB	electrohydraulic displacement control without feedback link, 24V with AMP Minitimer connector, proportional solenoid with pressure reducing valve (25 bar) (NFPE control)	O	O		O			
FC	electrohydraulic displacement control without feedback link, 12V with AMP Minitimer connector, proportional solenoid with pressure reducing valve (32 bar) (NFPE control)	O	O		O			
FD	electrohydraulic displacement control without feedback link, 24V with AMP Minitimer connector, proportional solenoid with pressure reducing valve (32 bar) (NFPE control)	O	O		O			
FG	electrohydraulic displacement control without feedback link, 12V with AMP Minitimer connector, proportional solenoid with pressure reducing valve (32 bar) fast response (NFPE control)			O	O	O	O	
FH	electrohydraulic displacement control without feedback link, 24V with AMP Minitimer connector, proportional solenoid with pressure reducing valve (32 bar) fast response (NFPE control)			O	O	O	O	
FK	electrohydraulic displacement control without feedback link, 12V with AMP Minitimer connector, proportional solenoid with pressure reducing valve (25 bar) (NFPE control)			O				
FL	electrohydraulic displacement control without feedback link, 24V with AMP Minitimer connector, proportional solenoid with pressure reducing valve (25 bar) (NFPE control)			O				
FM	electrohydraulic displacement control without feedback link, 12V with AMP Minitimer connector, proportional solenoid with pressure reducing valve (32 bar) fast response (NFPE control)			O				
FN	electrohydraulic displacement control without feedback link, 24V with AMP Minitimer connector, proportional solenoid with pressure reducing valve (32 bar) fast response (NFPE control)			O				

Series 90 Master Model Code (continued)

	R	Size	M	P	J	G	N	F	L	H	T	W	Y	Z	K
S90															

P	High Pressure Regulation	042	055	075	100	130	180	250
1	pressure limiter for port A and B (140-450 bar)	O	O	O	O	O	O	O
2	high pressure relief valves for port A and B (90-450 bar)	O	O	O	O	O	O	O

J	Auxiliary Mounting Pad	042	055	075	100	130	180	250
AB	SAE-A with sealed cover, 9 teeth coupling	O	O	O	O	O	O	O
BB	SAE-BB with sealed cover, 15 teeth coupling	O	O	O	O	O	O	O
BC	SAE-B with sealed cover, 13 teeth coupling	O	O	O	O	O	O	O
CD	SAE-C with sealed cover, 4 bolt adapter, 14 teeth coupling, (2) ½-13 UNC		O	O	O	O	O	O
DE	SAE-D with sealed cover, 13 teeth coupling					O	O	O
EF	SAE-E with sealed cover, 13 teeth coupling						O	O
NN	no auxiliary mounting pad	O	O	O	O	O	O	O

G	Endcap Ports	042	055	075	100	130	180	250
60	Side Ports		O	O	O			
80	Twin Ports	O	O	O	O	O	O	O

N	Filtration	042	055	075	100	130	180	250
D	external charge pump	O	O	O	O	O	O	O
L	pressure integral (long filter)	O	O	O	O	O		
P	pressure integral (short filter)	O	O	O	O	O		
R	remote pressure		O	O	O	O		
T	remote pressure with SAE 1 1/16 thread ports for high flow						O	O
S	suction filtration	O	O	O	O	O	O	O

F	Displacement Limitation	042	055	075	100	130	180	250
C	no limiters, only for 180 cc						O	
M	limitation both sides, only for 180 cc						O	
3	no limiters	O	O	O	O	O		O
4	limitation both sides	O	O	O	O	O		O
7	no limiters, spec. servo cylinder at side 1 with hard spring (only for pumps with NFPE-controls)	O	O	O	O	O	O	

Series 90 Master Model Code (continued)

	R	Size	M	P	J	G	N	F	L	H	T	W	Y	Z	K
S90															

L	Shaft Options	042	055	075	100	130	180	250
C3	splined shaft, 15 teeth, pitch = 16 / 32	O						
C6	splined shaft, 21 teeth, pitch = 16 / 32		O	O	O			
C7	splined shaft, 23 teeth, pitch = 16 / 32			O	O			
C8	splined shaft, 27 teeth, pitch = 16 / 32					O	O	O
F1	splined shaft, 13 teeth, pitch = 8 / 16				O	O	O	O
S1	splined shaft, 14 teeth, pitch = 12/24		O	O	O			
G1	splined shaft , 25 teeth, pitch = 20 / 40			O	O			
T1	tapered shaft diameter = 34,925 MM		O	O				
T6	tapered shaft diameter = 38,100 MM			O	O			
T8	tapered shaft diameter = 25,400 MM	O						
T4	tapered shaft diameter = 44,450 MM					O		

H	Charging System	042	055	075	100	130	180	250
B	nominal flow = 11 cc / rev	O	O					
C	nominal flow = 14 cc / rev	O	O	O				
D	nominal flow = 17 cc / rev		O	O	O			
E	nominal flow = 20 cc / rev			O	O			
F	nominal flow = 26 cc / rev				O	O		
H	nominal flow = 34 cc / rev					O	O	
J	nominal flow = 47 cc / rev						O	O
K	nominal flow = 65 cc / rev							O
L	external charge pump with internal charge pressure relief valve for units with auxiliary mounting pad	O	O	O	O	O	O	O
N	external charge pump with internal charge pressure relief valve for units with no auxiliary mounting pad	O		O	O	O	O	O

Series 90 Master Model Code (continued)

	R	Size	M	P	J	G	N	F	L	H	T	W	Y	Z	K
S90															

T *Control Orifice Options*

MDC

	inlet P	drain TA	drain TB	servo A	servo B	042	055	075	100	130	180	250
00	n/o	1.6 *)	1.6 *)	n/o	n/o	O	O	O	O	O	O	O
03	0.81	1.6 *)	1.6 *)	n/o	n/o	O	O	O	O	O	O	O
05	1.37	1.6 *)	1.6 *)	n/o	n/o	O	O	O	O	O	O	O
C5	0.81	1.4	1.4	n/o	n/o	O	O	O	O	O	O	O
C6	1.02	1.4	1.4	n/o	n/o	O	O	O	O	O	O	O

*) No orifice installed in control, orifice hole in contro spool

EDC

	inlet P	drain TA	drain TB	servo A	servo B	042	055	075	100	130	180	250
00 (1)	n/o	1.3	1.3	n/o	n/o	O	O	O	O	O	O	O
03 (1)	0.81	1.3	1.3	n/o	n/o	O	O	O	O	O	O	O
05 (1)	1.37	1.3	1.3	n/o	n/o	O	O	O	O	O	O	O
33	0.81	n/o	n/o	n/o	n/o	O	O	O	O	O	O	O

FNR

	inlet P		drain T	servo A	servo B	042	055	075	100	130	180	250
G1	n/o		1.2	n/o	n/o	O	O	O	O	O	O	O
G4	0.46		1.2	n/o	n/o	O	O	O	O	O	O	O
G8	0.66		1.2	n/o	n/o	O	O	O	O	O	O	O
GB	0.81		1.2	n/o	n/o	O	O	O	O	O	O	O
GD	1.57		1.2	n/o	n/o	O	O	O	O	O	O	O

HDC

	inlet P	drain TA	drain TB	servo A	servo B	042	055	075	100	130	180	250
00 (1)	n/o	1.3	1.3	n/o	n/o	O	O	O	O	O	O	O
03 (1)	0.81	1.3	1.3	n/o	n/o	O	O	O	O	O	O	O
05 (1)	1.37	1.3	1.3	n/o	n/o	O	O	O	O	O	O	O

NFPE

	inlet P		drain T	servo A	servo B	042	055	075	100	130	180	250
B1	n/o		1.5	n/o	n/o	O	O	O	O	O	O	O
B2	n/o		n/o	1.2	1.2	O	O	O	O	O	O	O
B6	n/o		n/o	n/o	n/o			O				

Series 90 Master Model Code (continued)

	R	Size	M	P	J	G	N	F	L	H	T	W	Y	Z	K
S90															

W	Special Hardware Features	042	055	075	100	130	180	250
EEG	speedring, no sensor, CP30 +4,3° valve plate	O	O	O	O	O		
EFC	speed sensing, Turck connector (KPPx156), CP15° +0,5° valve plate	O		O	O	O		
EFI	speed sensing, Turck connector (KPPx156), CP30° +4,3° valve plate	O	O	O	O	O	O	O
FAC	nested t- bar springs, CP15 +1,5° valve plate	O	O	O	O		O	
FAD	nested t- bar springs, CP15 +0,5° valve plate	O	O	O	O	O		
GBA	CP15 +0,5° valve plate	O	O	O	O	O		
GCA	CP15 +1,5° valve plate	O	O	O	O	O	O	
GLA	CP30 +4,3° valve plate, CP30 valve plate	O	O	O	O	O	O	O
NNN	180cc: CP15 +0,5° valve plate 250cc: CP15 +0,5° valve plate , nested T- bar springs						O	O

Y	High Pressure Setting **A**	042	055	075	100	130	180	250
26	260 bar	O	O	O	O	O	O	O
32	320 bar	O	O	O	O	O	O	O
35	350 bar	O	O	O	O	O	O	O
38	380 bar	O	O	O	O	O	O	O
40	400 bar	O	O	O	O	O	O	O
42	420 bar	O	O	O	O	O	O	O

Z	High Pressure Setting **B**	042	055	075	100	130	180	250
26	260 bar	O	O	O	O	O	O	O
32	320 bar	O	O	O	O	O	O	O
35	350 bar	O	O	O	O	O	O	O
38	380 bar	O	O	O	O	O	O	O
40	400 bar	O	O	O	O	O	O	O
42	420 bar	O	O	O	O	O	O	O

K	Charge Pressure Setting	042	055	075	100	130	180	250
20	20 bar	O	O	O	O	O	O	O
22	22 bar	O	O	O	O	O	O	O
24	24 bar	O	O	O	O	O	O	O
26	26 bar	O	O	O	O	O	O	O
28	28 bar	O	O	O	O	O	O	O
30	30 bar	O	O	O	O	O	O	O
32	32 bar	O	O	O	O	O	O	
34	34 bar		O	O	O	O	O	

3-Position (FNR) Electric Control - DC, DD

The 3-Position (FNR) control uses an electric input signal to switch the pump to a full stroke position.

Warning

Avoid designing a system which places the swashplate into full stroke when control operation is blocked by contamination.

Solenoid connector

Solenoid plug face for DIN 43650 connector

mating parts kit
Part No. K09129

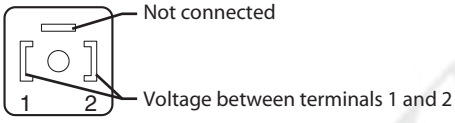

P102 022

3-position electric control hydraulic schematic

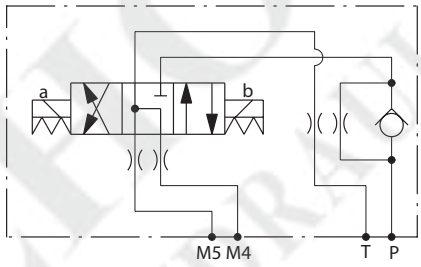

P102021

Pump displacement vs. electrical signal

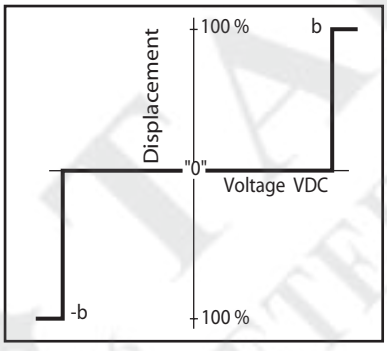

P102 023

Solenoid Data

Code	Voltage	Current	Connector
DC	12 Vdc	340 mA	DIN 46350
DD	24 Vdc	170 mA	DIN 46350

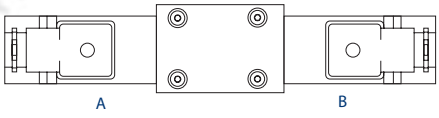

P108 495E

Response time

The time required for the pump to change from zero to full flow (acceleration), or full flow to zero (deceleration), is a function of the size of the orifice, the charge pressure, valve plates and other vehicle dynamics.

A range of orifice sizes are available for the Series 90 FNR Control to assist in matching the rate of swashplate response to the acceleration and deceleration requirements of the application. Testing should be carried out to determine the proper orifice selection for the desired response.

Pump output flow direction vs. control signal

Input shaft rotation	CW		CCW	
Signal at solenoid	A	B	A	B
Port A flow (M1)	Out	In	In	Out
Port B flow (M2)	In	Out	Out	In
Servo cylinder (side)	M5 (2)	M4 (1)	M5 (2)	M4 (1)

⚠ Warning Avoid designing a system which puts the swashplate into full stroke when control operation is blocked by contamination.

Electric Displacement Control (EDC), Options KA, KP, KT

Operation

The electric displacement control uses an electrohydraulic Pressure Control Pilot (PCP) valve to control the pilot pressure. The PCP converts an electrical input signal to a hydraulic input signal to operate a 4-way servo valve, which ports hydraulic pressure to either side of a double acting servo piston. The servo piston tilts the cradle swashplate, thus varying the pump's displacement from full displacement in one direction to full displacement in the opposite direction.

The control has a mechanical feedback mechanism which moves the servo valve in relation to the input signal and the angular position of the swashplate. The electrical displacement control is designed so the angular rotation of the swashplate (pump displacement) is proportional to the electrical input signal. Due to normal operating force changes, the swashplate tends to drift from the position preset by the machine operator. Drift, sensed by feedback linkage system connecting the swashplate to the control valve, will activate the valve and supply pressure to the servo piston, maintaining the swashplate in its preset position.

Features and Benefits

- The electric displacement control is a high gain control: With only a small change of the input current, the servo valve moves to a full open position thus porting maximum flow to the servo cylinder.
- Oil filled PCP case lengthens control life by preventing moisture ingression and dampening component vibrations.
- All electrical displacement controls are equipped with dual coil PCPs. The user has the option of using a single coil or both coils (in series or parallel).
- Internal mechanical stops on the servo valve allow rapid changes in input signal voltages without damaging the control mechanism.
- Precision parts provide repeatable accurate displacement settings.
- The swashplate is coupled to a feedback mechanism. The control valve drains the ends of the servo piston when an electric input signal is not present.
- Benefits:
  - Pump returns to neutral after prime mover shuts down
  - Pump returns to neutral if external electrical input signal fails or if there is a loss of charge pressure

Electric displacement control schematic

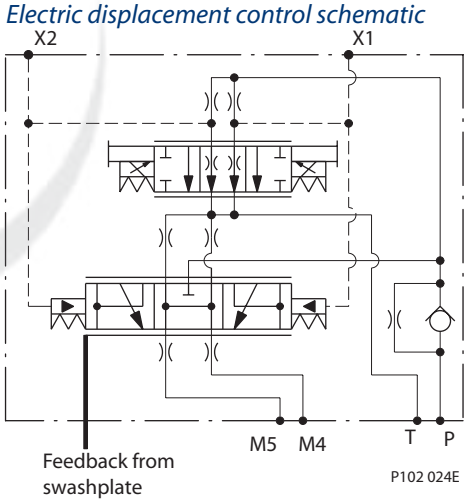

Cross-section

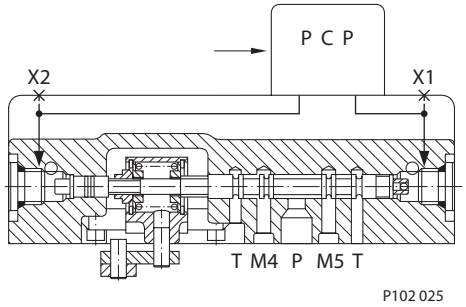

TousetheEDCcontrolinaPLUS+1 Guide application, download HWD file 10106626

Electric Displacement Control (EDC) (continued)

Electrical Characteristics

		One of Dual Coils		Dual Coils in Parallel		Dual Coils in Series		
		A B C D + phasing to terminals		A B C D + phasing to terminals		A B C D + phasing to terminals		Produces Flow Out of Pump Port
PUMP SHAFT ROTATION	Clockwise	A or C		A and C		A		A
	Clockwise		B or D		B and D		D	B
	Counterclockwise	A or C		A and C		A		B
	Counterclockwise		B or D		B and D		D	A
ELECTRICAL REQUIREMENTS	Start Current	A/B 14 mA ± 3 mA with 0.3 Vdc		14 mA with 0.13 Vdc		7 mA with 0.25 Vdc		
	Full Stroke Current	A/B 85 mA ± 11 mA with 1.7 Vdc		85 mA with 0.75 Vdc		43 mA with 1.55 Vdc		
	Start Current	C/D 14 mA ± 3 mA with 0.23 Vdc						
	Full Stroke Current	C/D 85 mA ± 11 mA with 1.36 Vdc						

P108 497E

The EDC is designed to be controlled from a DC current source or voltage source. Pulse width modulation (PWM) is not required. If a PWM signal is used to carry frequency greater than 200 Hz, do not use a pulse current of more than 120% of that required for full output.

Control signal requirements

Recommended PWM signal is 200 Hz, avoid exceeding 440 Hz.

⚠ Warning

Maximum input current under any condition: 250 mA
PWM frequency: 200 Hz
Coil resistance at 24°C [75°F]:
A-B coil 20 Ω
C-D coil 16 Ω

Pump displacement vs. control current

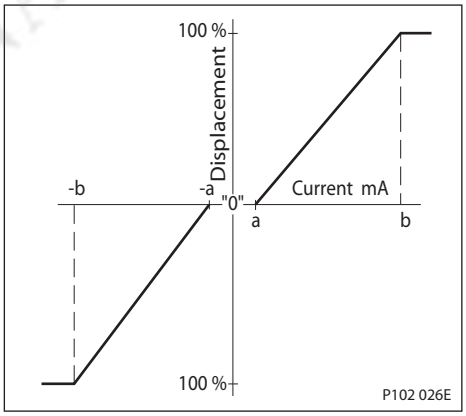

MS connector (option KA) MS 3102C-14S-2P

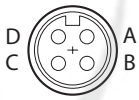

mating parts kit
Part no. K01588
Ident No. 615062

P102 027E

Packard® Weather-Pack (option KP) 4-way shroud connector

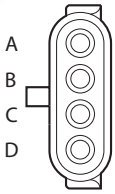

mating parts kit
Part no. K03384
(female terminals)

P102 028E

Deutsch DT Series connector (option KT)

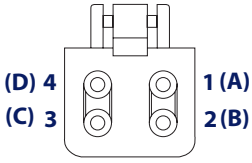

mating parts kit
Part no. K23511

P108 815E

Electric Displacement Control (EDC) (continued)

Response time

The time required for the pump output flow to change from zero to full flow (acceleration) or full flow to zero (deceleration) is a function of the size of the orifice in the control flow passage, charge pressure, valve plate and other vehicle dynamics.

A range of orifice sizes is available for the Series 90 Electric Displacement Control to assist in matching the rate of swashplate response to the acceleration and deceleration requirements of the application. Testing should be carried out to determine the proper orifice selection for the desired response.

For more information regarding response times for individual orifices, contact your representative.

Pump output flow direction vs. control current

EDC using a single coil or dual coils in parallel (A and C common, B and D common)

Input shaft rotation	CW		CCW	
Positive current to term	A or C	B or D	A or C	B or D
Port A flow (M1)	Out	In	In	Out
Port B flow (M2)	In	Out	Out	In
Servo cylinder (side)	M5 (2)	M4 (1)	M5 (2)	M4 (1)

EDC using a dual coil in series (B and C common)

Input shaft rotation	CW		CCW	
Positive current to term	A	D	A	D
Port A flow (M1)	Out	In	In	Out
Port B flow (M2)	In	Out	Out	In
Servo cylinder (side)	M5 (2)	M4 (1)	M5 (2)	M4 (1)

Refer to *Installation Drawings* for port locations.

For further information on EDC controls, refer to *Electrical Displacement Control For Series 90 Pumps*, **BLN-95-9060.**

Manual Over Ride (MOR)

EDC controls are available with a Manual Over Ride (MOR) which is intended for temporary actuation of the control to aid in pump diagnostics.

⚠ Warning

Using the MOR to control the pump will not result in proportional control.

Refer to the control flow table in the size specific technical information manual for the relationship of solenoid to direction of flow.

⚠ Warning

The vehicle must always be in a safe condition (i.e. vehicle lifted off the ground) when using the MOR function. The MOR lever has a must be manually actuated to be engaged. Moving the plunger mechanically moves the pilot stage armature which allows the pump to go on stroke. The MOR should be engaged anticipating a full stroke response from the pump.

Pump Phasing With EDC Manual Operator (MOR)		
Pump Rotation	MOR Rotation	Pump Flow Out Port
CW	Towards Connector	B
CCW	Towards Connector	A

P108 498E

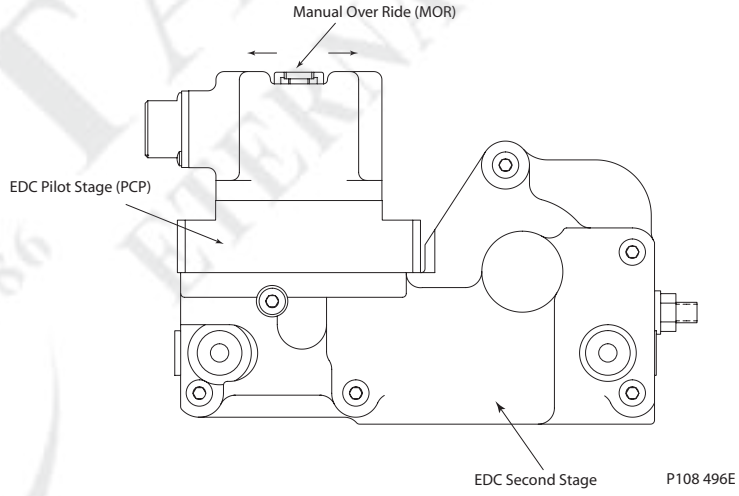

P108 496E

⚠ Warning

Unintended MOR operation will cause the pump to go into stroke.

Hydraulic Displacement Control (HDC) , Option HF

⚠ Warning

Avoid designing a system which puts swashplate into full stroke when control operation is blocked by contamination.

Operation

The hydraulic displacement control uses a hydraulic input signal to operate a 4-way servo valve, which ports hydraulic pressure to either side of a double acting servo piston. The servo piston tilts the cradle swashplate, thus varying the pump's displacement from full displacement in one direction to full displacement in the opposite direction.

The control has a mechanical feedback mechanism which moves the servo valve in relation to the input signal and the angular rotation of the swashplate. The hydraulic displacement control is designed so the angular position of the swashplate (pump displacement) is proportional to the hydraulic input signal pressure. Due to normal operating force changes, the swashplate tends to drift from the position preset by the machine operator. Drift, sensed by feedback linkage system connecting the swashplate to the control valve, activates the valve to supply pressure to the servo piston, maintaining the swashplate in its preset position.

Features and benefits of the hydraulic displacement control:

- The hydraulic displacement control is a high gain control: With only small change of the input signal, the servo valve moves to a full open position porting maximum flow to the servo cylinder.
- Internal mechanical stops on the servo valve allow rapid changes in input signal pressure without damaging the control mechanism.
- Precision parts provide repeatable, accurate displacement settings with a given input signal.
- The swashplate is coupled to a feedback mechanism. The control valve drains the ends of the servo piston when an input signal is not present.
- Benefits:
  - Simple - low cost design.
  - Pump returns to neutral after prime mover shuts down.
  - Pump returns to neutral if there is a loss of input signal pressure or if there is a loss of charge pressure.

Cross-section

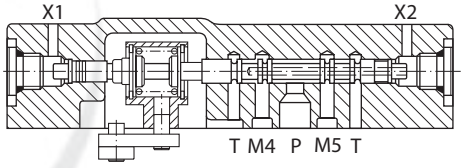

Hydraulic displacement control schematic

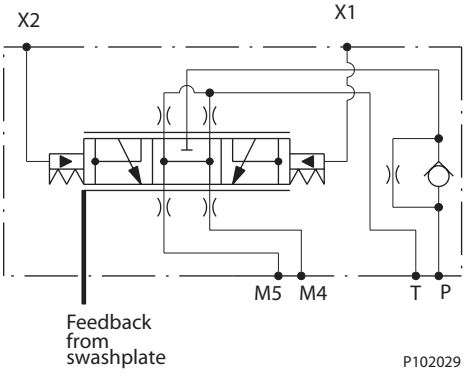

Hydraulic Displacement Control (HDC), Option HF (continued)

⚠ Warning

Control signal requirements
Maximum allowable signal pressure is 60 bar [870 psi]. Exceeding allowable signal pressure will cause damage to the control.

Response time

The time required for the pump output flow to change from zero to full flow (acceleration) or full flow to zero (deceleration) is a function of the size of the orifice in the control flow passage, charge pressure, valve plates and other vehicle dynamics.

A range of orifice sizes are available for the Series 90 hydraulic displacement control to assist in matching the rate of swashplate response to the acceleration and deceleration requirements of the application. Testing should be carried out to determine the proper orifice selection for the desired response.

For more information regarding response time for individual orifices, please contact your representative.

Pump displacement vs. signal pressure

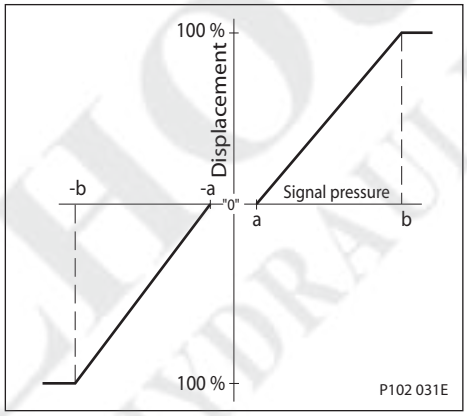

*Hydraulic signal pressure range**

a	3 ± 0.5 bar	[43 ± 6 psi]
b	11 ± 0.5 bar	[160 ± 6 psi]

Pump output flow direction vs. control pressure

Input shaft rotation	CW		CCW	
Control pressure to port	X1	X2	X1	X2
Port A flow (M1)	Out	In	In	Out
Port B flow (M2)	In	Out	Out	In
Servo cylinder (side)	M5 (2)	M4 (1)	M5 (2)	M4 (1)

Refer to *Installation drawings*, for port locations.

Manual Displacement Control (MDC), Options MA, MB

⚠ Warning

Avoid designing a system which puts swashplate into full stroke when control operation is blocked by contamination.

Operation

The manual displacement control converts a mechanical input signal to a hydraulic signal that tilts the cradle swashplate through an angular rotation varying the pump's displacement from full displacement in one direction to full displacement in the opposite direction.

The manual displacement control has a mechanical feedback mechanism which moves a servo valve in the proper relationship to the input signal and the angular position of the swashplate. The control is designed so that the angular rotation of the swashplate is proportional to the mechanical input signal. The control is designed with an internal override mechanism which allows the mechanical input to be moved at a faster rate than the movement of the swashplate without damage to the control.

Features and benefits of the manual displacement control:

- Precision parts provide repeatable, accurate displacement settings with a given input signal.
- The manual displacement control is a high gain control: With only small movement of the control handle (input signal), the servo valve moves to full open position porting maximum flow to the servo cylinder. This is a high response system with low input force.
- The integral override mechanism allows rapid changes in input signal without damaging the control mechanism.
- Precision parts provide repeatable, accurate displacement settings with a given input signal.
- The double-acting servo piston is coupled to a spring centering mechanism. The servo control valve is spring centered such that with no input signal the servo valve is open centered and thus no fluid is ported to the servo cylinder.
- Benefits:
  - Pump returns to neutral after prime mover shuts down.
  - Pump returns to neutral if external control linkage fails at the control handle or if there is a loss of charge pressure.

Manual displacement control schematic

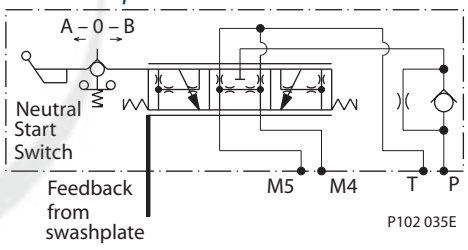

Cross-section

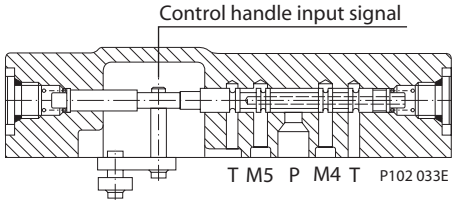

Manual Displacement Control (MDC) Options MA, MB (continued)

External control handle requirements

- Torque required to move handle to maximum displacement is 0.68 to 0.9 N•m [6 to 8 lbf•in].
- Torque required to hold handle at given displacement is 0.34 to 0.57 N•m [3 to 5 lbf•in].
- Torque required to overcome the override mechanism is 1.1 to 2.3 N•m [10 to 20 lbf•in] with the maximum torque required for full forward to full reverse movement.
- Maximum allowable input torque is 17 N•m [150 lbf•in].

Pump displacement vs. control lever rotation

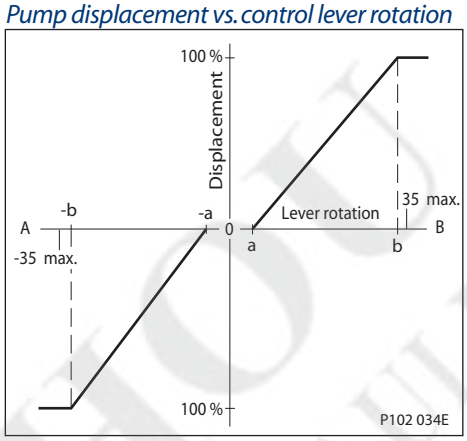

Control lever rotation range

a	0,5° - 4.5°
b	24° - 30°

Volumetric efficiencies of the system will have impacts on the start- and end input-commands.

Response time

The time required for the pump output flow to change from zero to full flow (acceleration) or full flow to zero (deceleration) is a function of the size of the orifice and charge pressure in the control, charge pressure, valve plates and other vehicle dynamics.

A range of orifice sizes is available for the Series 90 manual displacement control to assist in matching the rate of swashplate response to the acceleration and deceleration requirements of the application. Testing should be carried out to determine the proper orifice selection for the desired response. For more information regarding response time for individual orifices, please contact your representative.

MDC handle rotation parameters

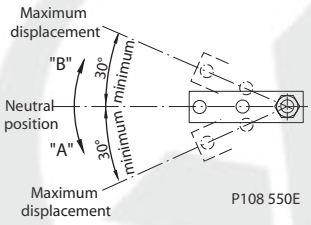

Pump output flow direction vs. control handle rotation

Input shaft rotation	CW		CCW	
Handle rotation	A	B	A	B
Port A flow (M1)	Out	In	In	Out
Port B flow (M2)	In	Out	Out	In
Servo cylinder (side)	M5 (2)	M4 (1)	M5 (2)	M4 (1)

Refer to *Installation drawings* for handle connection requirements

MDC with Neutral Start Switch (NSS)

The neutral start switch (NSS) stops the prime mover from starting unless the pump is in neutral. When the control is not in neutral position, the switch is disengaged, and the prime mover will not start. When the control is in neutral position, the switch is engaged, allowing the prime mover to start.

MDC with neutral start switch

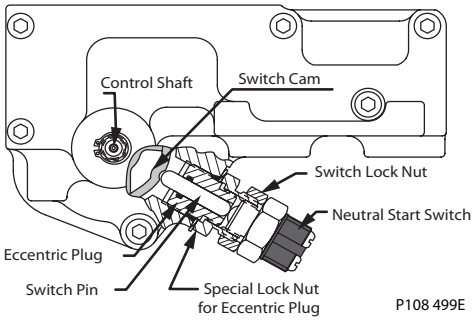

Non Feedback Proportional Electric Control (NFPE)

The Non Feedback Proportional Electric (NFPE) control is an electrical automotive control in which an electrical input signal activates one of two proportional solenoids that port charge pressure to either side of the pump servo cylinder. The NFPE control has no mechanical feedback mechanism.

The pump displacement is proportional to the solenoid signal current, but it also depends upon pump input speed and system pressure. This characteristic also provides a power limiting function by reducing the pump swashplate angle as system pressure increases.

Control response

Series 90 controls are available with optional control passage orifices to assist in matching the rate of swashplate response to the application requirements (e.g. in the event of electrical failure). Software ramp or rate limiting should be used to control vehicle response in normal operation. The time required for the pump output flow to change from zero to full flow (acceleration) or full flow to zero (deceleration) is a net function of spool porting, orifices, charge pressure, valve plates and other vehicle dynamics. A swashplate response table is available for each frame indicating available swashplate response times. Testing a prototype system to verify the software and orifice selection provide the desired response.

Series 90 pumps have many orificing combinations, however, software is the best means of controling the swashplate response in normal operating conditions. Mechanical servo orifices should be used only for fail-safe return to neutral in the event of an electrical failure.

Pump Displacement vs. Input Signal

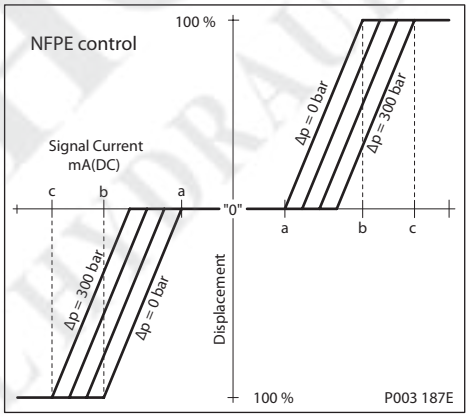

NFPE Schematic

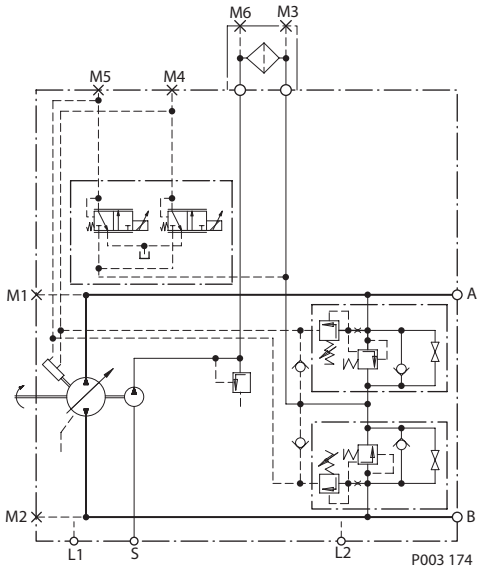

Non Feedback Proportional Electric Control (NFPE) (continued)

NFPE control used with a microcontroller

- Creep mode
- Two automotive control ramps via mode switch
- Engine overspeed protection
- Electric control
- Anti-stall function
- Smooth operation
- Electronic ramp control is superior to hydraulic control with orifices

Input signal requirements

The NFPE control requires a pulse-width-modulated (PWM) input current to optimize performance. The recommended PWM frequency is 100 Hz. The minimum PWM frequency is 80 Hz.

Solenoid data

Option	FA	FB	FC	FD	FK	FL	FM	FN	FG	FH
Frame Size	42cc, 55cc, 100cc				75cc				75cc, 100cc, 130cc, 180cc	
Voltage [V]	12	24	12	24	12	24	12	24	12	24
32Working Pressure [Bar]	25	25	32	32	25	25	25	32	32	32
Maximum Current [mA]	1500	750	1500	750	1500	750	1500	750	1500	750
Start Current [mA]	440	220	440	220	440	220	440	220	440	220
End Current [mA]	1290	645	1280	645	1290	645	1290	645	1290	645
Coil Resistance [Ohm]	4.72±5%	20.8±5%	5.3±5%	21.2±5%	4.72±5%	4.72±5%	4.72±5%	4.72±5%	4.98±3%	20.6±3%
PWM Range [Hz]	70-200				70-200				70-200	
PWM Prefered [Hz]	200				200				200	
Protection Class	up to IP6K6/IPX7/IPX9K				up to IP6K6/IPX7/IPX9K				IP65 DIN 40050	
Connector	Amp Junior Timer				AMP Junior Timer				Amp Junior Timer	

* PWM Signal Required for Optimum Control Performance.

TousetheNFPEcontrolinaPLUS+1 application, download the appropriate file .

NFPE pump displacement vs. input signal

Shaft rotation	CW		CCW	
Active solenoid	1 and A	2 and B	1 and A	2 and B
Port A flow	Out	In	In	Out
Port B flow	In	Out	Out	In
Servo cylinder	M5	M4	M5	M4

TheNFPEcontrolusesanAMP®Junior Power Timer connector. The solenoids are compatible with microcontrollers and joysticks.

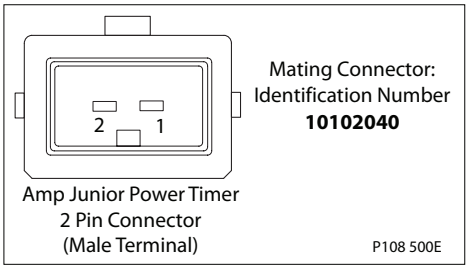

Multi-Function Valves

Overpressure protection

The Series 90 pumps are designed with a sequenced pressure limiting system and high pressure relief valves. When the preset pressure is reached, the pressure limiter system acts to rapidly de-stroke the pump to limit the system pressure. For unusually rapid load application, the high pressure relief valve is also available to limit the pressure level. The pressure limiter sensing valve acts as the pilot for the relief valve spool, such that the relief valve is sequenced to operate above the pressure limiter level.

Both the pressure limiter sensing valves and relief valves are built into the multi-function valves located in the pump endcap. The sequenced pressure limiter/high pressure relief valve system in the Series 90 provides an advanced design of overpressure protection.

The pressure limiter avoids system overheating associated with relief valves and the sequenced relief valves are available to limit pressure spikes which exist in severe operating conditions.

Because the relief valves open only during extremely fast pressure spike conditions, heat generation is minimized during the short time that they might be open. For some applications, such as dual path vehicles, the pressure limiter function may be defeated such that only the relief valve function remains. The relief response is approximately 20 ms whether used with or without the pressure limiter function.

Pressure limiting function

When set pressure is exceeded, the pressure sensing valve (A) flows oil through passage (B) and across an orifice in the control spool raising pressure on the servo which was at low pressure. Servo pressure relief valves (C) limit servo pressure to appropriate levels. The pressure limiter action cancels the input command of the displacement control and tends to equalize servo pressure. Swashplate moments assist to change the displacement as required to maintain system pressure at the set point. The HPRV is always set 30 bar above the pressure limiter setting.

HPRVs are factory set at a low flow condition. Any application or operating condition which leads to elevated HPRV flow will cause a pressure rise with flow above a valve setting. Consult factory for application review. Excessive operation of the HPRV will generate heat in the closed loop and may cause damage to the internal components of the pump.

Multi-Function Valves (continued)

Multifunction valve, pressure limiter, pressure regulation, option 1

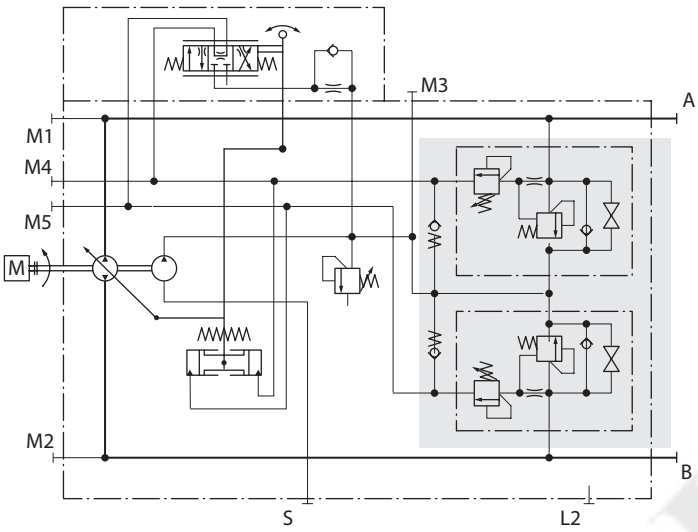

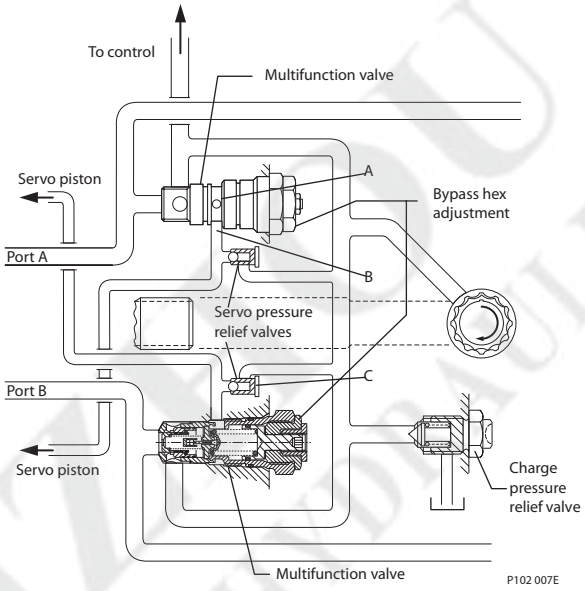

Bypass Function

In some applications it is desirable to bypass fluid around the variable displacement pump when pump shaft rotation is either not possible or not desired. For example, an inoperable vehicle may be moved to a service or repair location or winched onto a trailer without operating the prime mover. To provide for this, Series 90 pumps are designed with a bypass function.

The bypass is operated by mechanically rotating the bypass hex on both multifunction valves three (3) turns counterclockwise (CCW). This connects working loop A and B and allows fluid to circulate without rotating the pump and prime mover.

Caution

Excessive speeds and extended load/vehicle movement must be avoided while moving in bypass function. The load or vehicle should be moved not more than 20 % of maximum speed and for a duration not exceeding 3 minutes. Damage to drive motor(s) is possible. When the bypass function is no longer needed care should be taken to re-seat the HPRV hex plugs to the normal operating position.

Caution

Possible pump and/or motor damage.
Bypass valves are intended for moving a machine or vehicle for very short distances at very slow speeds. They are NOT intended as tow valves.

Auxiliary Mounting Pads

Auxiliary mounting pad specifications

Mounting pad	Option code	Spline coupling	Frame size/Maximum torque N•m [lbf•ft]						
			042	055	075	100	130	180	250
SAE A	AB	9T 16/32	169 [125]	93 [69]	97 [72]	97 [72]	106 [78]	120 [89]	120 [89]
SAE B	BC	13T 16/32	283 [209]	204 [150]	211 [156]	211 [156]	334 [246]	324 [239]	324 [239]
SAE B-B	BB	15T 16/32	301 [222]	342 [252]	281 [207]	281 [207]	368 [271]	368 [271]	368 [271]
SAE C	CD	14T 12/24	n/a	408 [301]	447 [330]	447 [330]	741 [546]	628 [463]	624 [460]
SAE D	DE	13T 8/16	n/a	n/a	n/a	n/a	741 [546]	1070 [789]	1070 [789]
SAE E	EF	13T 8/16	n/a	n/a	n/a	n/a	n/a	1070 [789]	1070 [789]
SAE E	EG	27T 16/32	n/a	n/a	n/a	n/a	n/a	1220 [900]	1220 [900]

Mating pump requirements

The accompanying drawing provides the dimensions for the auxiliary pump mounting flange and shaft.

Pump mounting flanges and shafts with the dimensions noted below are compatible with the auxiliary mounting pads on the Series 90 pumps. An O-ring is required when a pump is bolted to an aux pad. Refer to outline drawings for more details and O-ring dimensions.

Auxiliary pump mounting flange and shaft

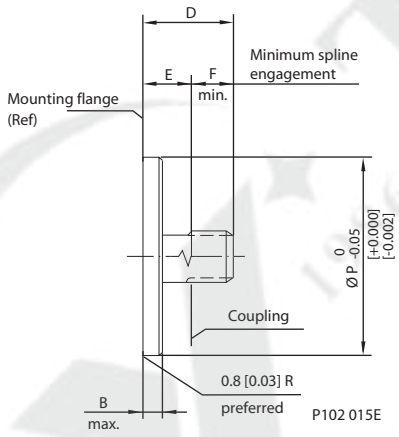

Auxiliary pump dimensions

Flange size	Units	P diameter	B maximum	D	F minimum
SAE A	mm [in]	82.55 [3.25]	7.4 [0.29]	32 [1.26]	13.5 [0.53]
SAE B		101.6 [4.00]	10.7 [0.42]	41 [1.61]	14.2 [0.56]
SAE B-B		101.6 [4.00]	10.7 [0.42]	46 [1.81]	16.1 [0.63]
SAE C		127.0 [5.00]	14.3 [0.56]	56 [2.20]	18.3 [0.72]
SAE D		152.4 [6.00]	14.3 [0.56]	75 [2.95]	20.8 [0.82]
SAE E 13 teeth		165.1 [6.50]	18.0 [0.71]	75 [2.95]	20.8 [0.82]
SAE E 27 teeth		165.1 [6.50]	18.0 [0.71]	75 [2.95]	27.0 [1.06]

Displacement Limiter

All Series 90 pumps are designed with optional mechanical displacement (stroke) limiters.

The maximum displacement of the pump can be set independently for forward and reverse using the two adjustment screws.

⚠ Warning

Adjusting the displacement limiter with the machine running may result in leakage. If backed out too far, the adjustment screw will come completely out of its threaded bore.

Displacement limiter location

Pump rotation	Displacement limiter mounted on servo side	Displacement limitation at high pressure side
Right [CW]	1	A
	2	B
Left [CCW]	1	B
	2	A

Displacement limiter

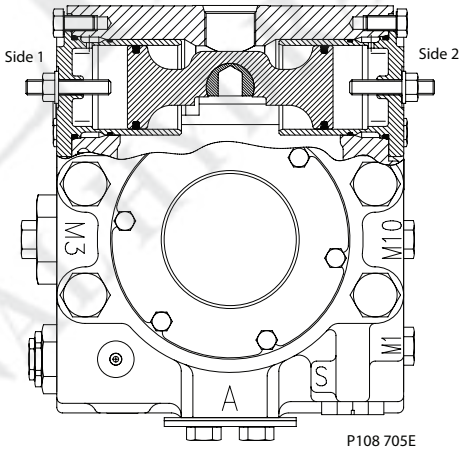

Frame size	Lock nut wrench size and torque	Adjusting screw wrench size internal hex	Approximate displacement change per revolution of adjusting screw
042	13 mm 24 N•m [18 lbf•ft]	4 mm	3.5 cm³/(rev) [0.21 in³/rev]
055	13 mm 24 N•m [18 lbf•ft]	4 mm	4.2 cm³/rev [0.26 in³/rev]
075	13 mm 24 N•m [18 lbf•ft]	4 mm	5.1 cm³/rev [0.31 in³/rev]
100	13 mm 24 N•m [18 lbf•ft]	4 mm	6.2 cm³/rev [0.38 in³/rev]
130	17 mm 48 N•m [35 lbf•ft]	5 mm	8.8 cm³/rev [0.53 in³/rev]
180	19 mm 125 N•m [92 lbf•ft]	6 mm	12.5 cm³/rev [0.76 in³/rev]
250	19 mm 125 N•m [92 lbf•ft]	6 mm	17.3 cm³/rev [1.06 in³/rev]

Shaft Torque

Shaft torque and spline lubrication

The **rated torque** is a measure of tooth wear and is the torque level at which a normal spline life of 2 x 10^9 shaft revolutions can be expected. The rated torque presumes a regularly maintained minimum level of lubrication via a moly-disulfide grease in order to reduce the coefficient of friction and to restrict the presence of oxygen at the spline interface. It is also assumed that the mating spline has a minimum hardness of R_c 55 and full spline depth. The rated torque is proportional to the minimum active spline length.

Maximum torque ratings are based on torsional fatigue strength considering 100.000 full load reversing cycles. However, a spline running in oil-flooded environment provides superior oxygen restriction in addition to contaminant flushing. The rated torque of a flooded spline can increase to that of the maximum published rating. A flooded spline would be indicative of a pump driven by a pump drive or plugged into an auxiliary pad of a pump.

Maintaining a spline engagement at least equal to the Pitch Diameter will also maximize spline life. Spline engagements of less than ¾ Pitch Diameter are subject to high contact stress and spline fretting.

Shaft torque for tapered shafts

The **rated torque** is based on the contact pressure between the shaft and hub surfaces with poor surface contact areas. With an increased quality of the contact areas, the contact pressure between the shaft and hub is increased and allows higher torque to be transmitted.

When a key is used for orientation of the hub on the shaft in conjunction with poor quality contact surfaces, the transmitted torque will drop significantly. This is due to the key carrying the torque, which limits the shaft torque carrying capability.

Maximum torque rating is based on an ideal contact area of 100 % and the retaining nut properly torqued. This allows for the highest contact pressure between the shaft and the hub.

Shaft Availability and Torque Ratings

Alignment between the mating spline's pitch diameters is another critical feature in determining the operating life of a splined drive connection. *Plug-in*, or *rigid* spline drive installations can impose severe radial loads on the shafts. The radial load is a function of the transmitted torque and shaft eccentricity. Increased spline clearance will not totally alleviate this condition; but, increased spline clearance will prevent mechanical

interference due to misalignment or radial eccentricity between the pitch diameters of the mating splines. Spline life can be maximized if an intermediate coupling is introduced between the bearing supported splined shafts.

For multiple pump installations, consider load of the entire pump stack. All torques are additive. Include charge pumps loads when calculating torques.

Shaft Availability and Torque Ratings (continued)

Refer to the outline drawings for shaft dimensions.

Through torque diagram

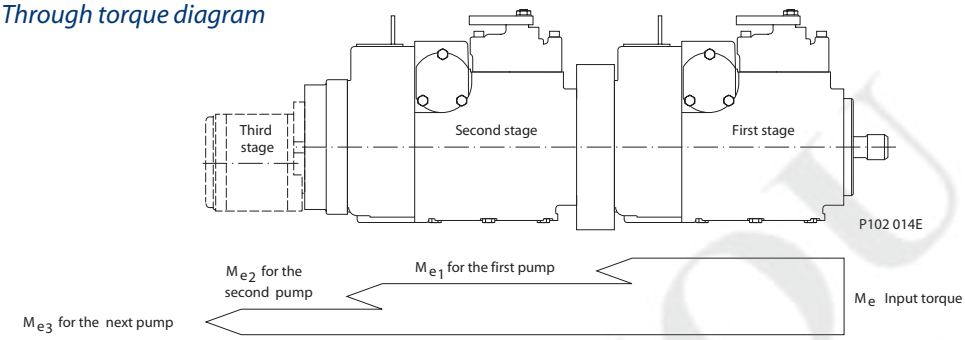

Torque required by auxiliary pumps is additive. Ensure requirements don't exceed shaft torque ratings.

Shaft availability and maximum input torque - splined shafts

Option code	Customer end	Frame size/Maximum torque N•m [lbf•ft]						
		042	055	075	100	130	180	250
C3	15T 16/32	548 [404]	n/a	n/a	n/a	n/a	n/a	n/a
C6	21T 16/32	n/a	1287 [949]	1214 [895]	1214 [895]	n/a	n/a	n/a
C7	23T 16/32	n/a	n/a	1625 [1218]	1822 [1344]	n/a	n/a	n/a
C8	27T 16/32	n/a	n/a	n/a	n/a	2693 [1986]	3125 [2304]	3464 [2554]
G1	25T 20/40	n/a	n/a	1379 [1017]	1390 [1025]	n/a	n/a	n/a
F1	13T 8/16	n/a	n/a	n/a	2303 [1700]	2303 [1700]	2303 [1700]	2682 [1978]
S1	14T 12/24	n/a	832 [613]	853 [629]	974 [718]	n/a	n/a	n/a

Shaft availability and maximum input torque - tapered shafts

Option code	Customer end	Maximum nut torque		Maximum Torque transmitted through joint	Frame size/Maximum shaft torque N•m [lbf•ft]						
		SD supplied nut (1)	customer supplied nut (2)		042	055	075	100	130	180	250
T8	Taper 1″ - lock nut*	190 [140]	357 [263]	Must be determined by customer	626 [462]	n/a	n/a	n/a	n/a	n/a	n/a
T1	Taper 1.375″ - crowned nut**	210 [155]	704 [519]	Must be determined by customer	n/a	1209 [892]	1209 [892]	n/a	n/a	n/a	n/a
T6	Taper 1.5″ - lock nut*	525 [390]	882 [650]	Must be determined by customer	n/a	n/a	1755 [1294]	1755 [1294]	n/a	n/a	n/a
T4	Taper 1.75″ - crowned nut**	400 [295]	1391 [1026]	Must be determined by customer	n/a	n/a	n/a	n/a	2488 [1835]	n/a	n/a

* without key
** with woodruff key

Caution (1)
Exceeding the maximum torque value for SD supplied nut may result in **nut** failure.

Caution (2)
Customer may supply a stronger nut. Exceeding the maximum torque value for customer supplied nut may result in **shaft** failure.

Shaft Availability and Torque Ratings (continued)

Tapered Shaft Customer Acknowledgement

Caution

The customer is responsible for proper analysis, design, and quality of the mating female coupling, key, and applied torque on the nut. Torque must be transmitted by the taper fit between the shaft and mating coupling, not the key. Failure to properly analyze the nut torque required to create a robust joint could result in transmitting torque through the key which may lead to premature shaft failure.

The specified torque rating of the tapered shaft is based on the cross-sectional diameter of the shaft through the keyway and assumes proper clamp and fit between shaft and coupling. Guarantees the design and manufactured quality of the tapered shaft.

We has made provisions for the key in accordance to the ISO specification with the understanding that the key is solely to assist in the installation of the mating coupling.

Charge Pump

Charge flow is required on all Series 90 pumps applied in closed circuit installations. The charge pump provides flow to make up internal leakage, maintain a positive pressure in the main circuit, provide flow for cooling and filtration, replace any leakage losses from external valving or auxiliary systems, and to provide flow and pressure for the control system.

Many factors influence the charge flow requirements. These factors include system pressure, pump speed, pump swashplate angle, type of fluid, temperature, size of heat exchanger, length and size of hydraulic lines, control response characteristics, auxiliary flow requirements, hydrostatic motor type, etc.

Unusual application conditions may require a more detailed review of charge pump sizing. Charge pressure must be maintained at a specified level under all operating conditions to prevent damage to the transmission.

Charge pump sizing/selection

In most applications a general guideline is that the charge pump displacement should be at least 10% of the total displacement of all components in the system. Unusual application conditions may require a more detailed review of charge flow requirements. Refer to *Selection of Drive line Components* **BLN-9885**, for a detailed procedure.

System features and conditions which may invalidate the 10% guideline include (but are not limited to):

- Continuous operation at low input speeds (< 1500 min^{-1} (rpm))
- High shock loading
- Excessively long system lines (> 3m [9.8 ft])
- Auxiliary flow requirements
- Use of low speed high torque motors
- High flushing flow

Available charge pump sizes and speed limits

Code	Charge pump size cm^3 [in^3]	Rated speed min^{-1} (rpm)
B	11 [0.69]	4200
C	14 [0.86]	4200
D	17 [1.03]	3900
E	20 [1.20]	3600
F	26 [1.60]	3300
H	34 [2.07]	3100
J	47 [2.82]	2600
K	65 [3.90]	2300

Charge Pump (continued)

Charge pump flow and power curves

Charge pressure:	20 bar	[350 psi]
Case drain:	80 °C (8.2 cSt)	180 °F (53 SUS)
Reservoir temperature:	70 °C (11 cSt)	160 °F (63 SUS)

Charge pump output flow

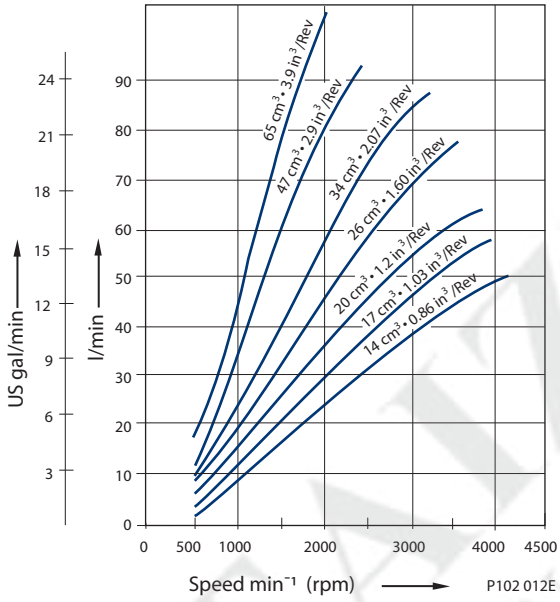

Charge pump power requirements

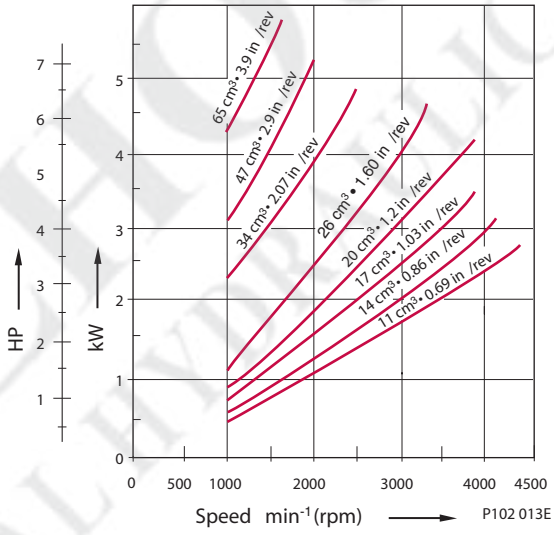

Speed Sensor

An optional speed sensor for direct measurement of speed is available.

A special magnetic ring is pressed onto the outside diameter of the cylinder block and a Hall effect sensor is located in the housing. The sensor accepts supply voltage and outputs a digital pulse signal in response to the speed of the ring. The output changes its high/low state as the north and south poles of the permanently magnetized speed ring pass by the face of the sensor. The digital signal is generated at frequencies suitable for microprocessor based controls. The sensor is available with different connectors.

To use the speed sensor in a PLUS+1 Guide application, download HWD file **10106825** . To identify the sensors that are PLUS+1 compliant, please contact your representative.

Electrical and Environmental Data

Electrical		
Supply voltage (two ranges)		
Regulated 4.5 to 8.5 Vdc		
Battery 7 to 32 Vdc		
Maximum operating current		
20 mA at 1 Hz and 5 Vdc supply		
Required current		
12 mA at 5 Vdc (no load)		
Output voltage in high state		
Supply voltage minus 0.5 Vdc minimum (no load)		
Output voltage in low state		
0.5 Vdc, maximum (no load)		
Maximum frequency		
15 kHz		
Load		
15 kΩ to both ground and supply		
Peak transient voltage		
80 Vdc for 2 milliseconds, 4.5 to 8.5 Vdc models	300 Vdc for 2 milliseconds, 7 to 32 Vdc models	200 Vdc for 100 milliseconds, 7 to 32 Vdc models
Peak reverse voltage		
-15 Vdc continuous, 4.5 to 8.5 Vdc models	-32 Vdc continuous, 7 to 32 Vdc models	
Environmental		
Operating and storage temperature		
-40° to 110° C [-40° to 230° F]		

For more information on the speed sensor, refer to *KPP Pulse Pickup (PPU) Technical Information* **11029257**.

⚠ Warning

Do not energize the 4.5 to 8.5 Vdc sensor with 12 Vdc battery voltage. Use a regulated power supply. If you need to energize the sensor with battery voltage, contact your representative for a special sensor.

Pulse frequency

	042	055	075	100	130	180	250
Pulse per revolution	48	52	58	63	69	77	85

Connector Pin Assignments

3 pin Deutsch Plug DT Series connector

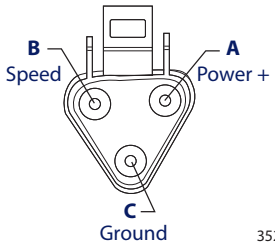

4 pin Deutsch® Plug DT Series Connector

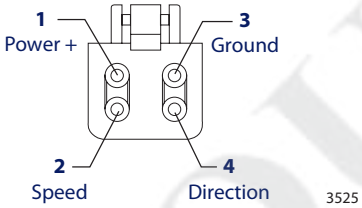

3 or 4 pin Delphi Connector

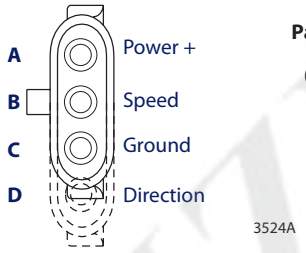

Packard Weather-Pack
4 pin
(Supplied Connector)

Mating Connector
No.: K03379
Id.-No.: 505341

4 pin Turck Eurofast connector

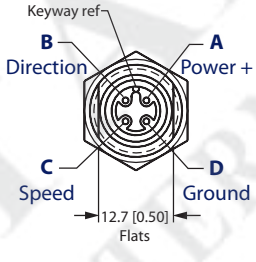

Turck Eurofast Connector
4 pin
(Supplied Connector)

Mating Connector

straight	right angle
No.: K14956	No.: K14957
Id.-No.: 500724	Id.-No.: 500725

mm [in]

Frame Size 042

Manual displacement control (MDC), endcap twin ports, option 80

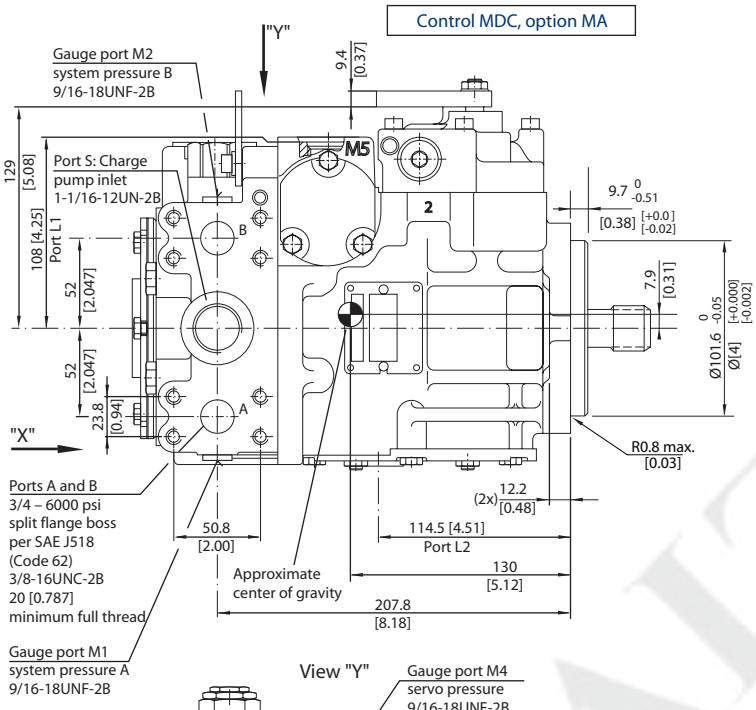

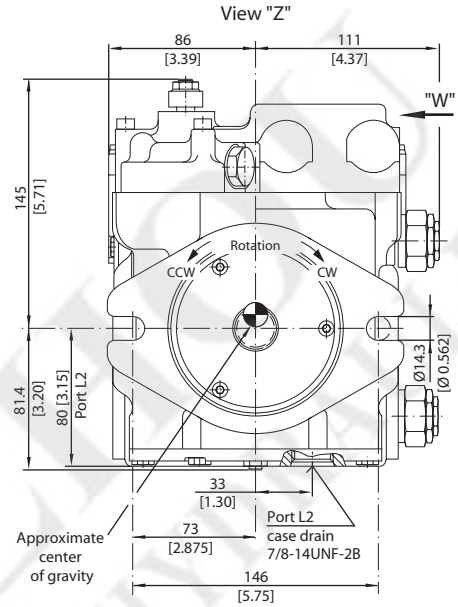

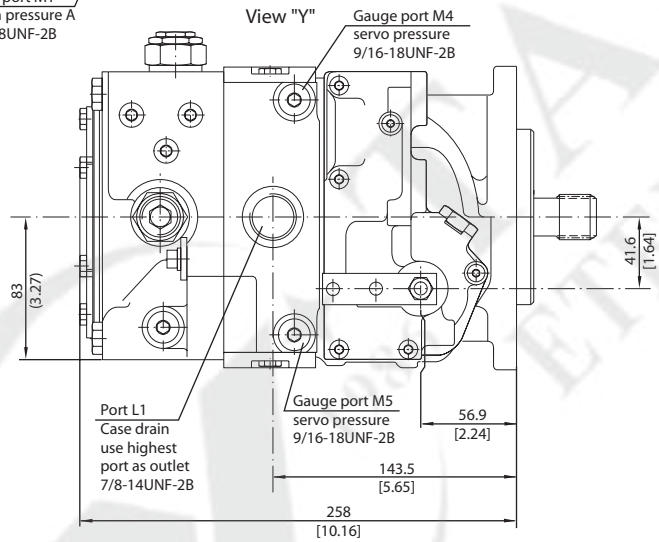

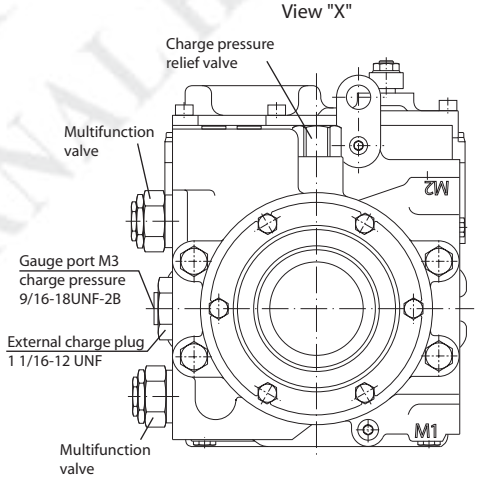

Manual displacement control handle dimensions

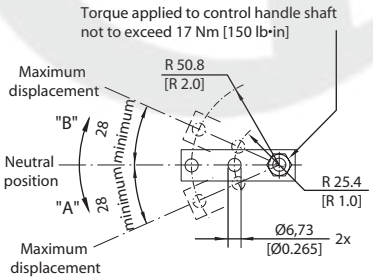

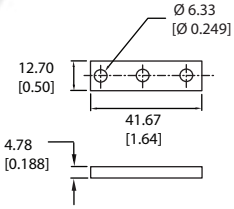

P102 040

mm [in]

Frame Size 042 (continued)

Auxiliary mounting pad – options AB, BC, BB

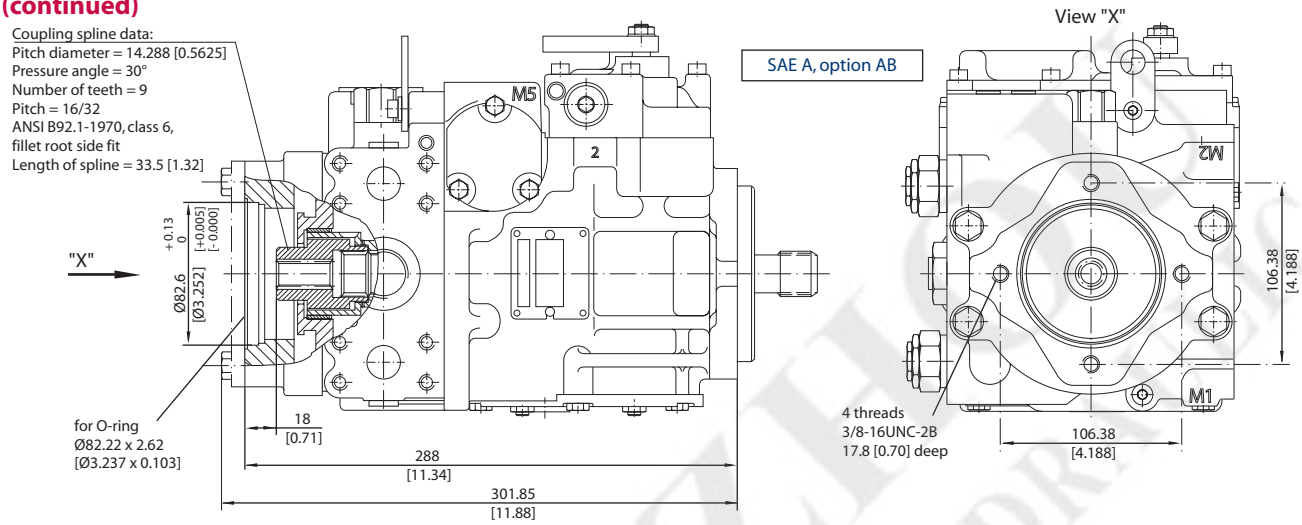

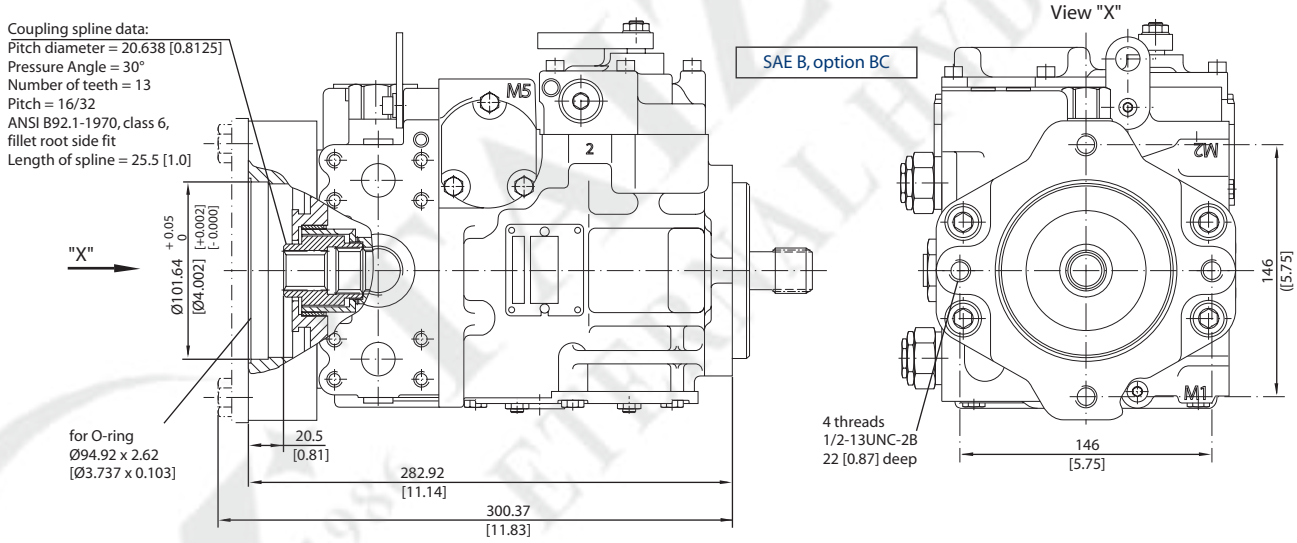

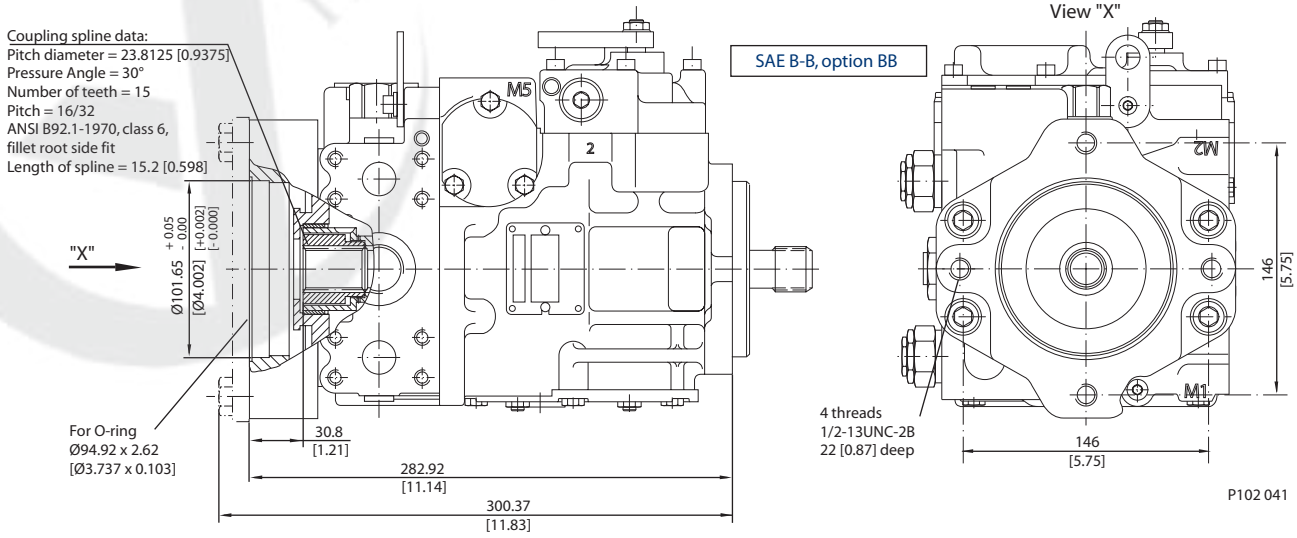

P102 041

mm [in]

Frame Size 042 (continued)

Shaft dimensions

Option T8

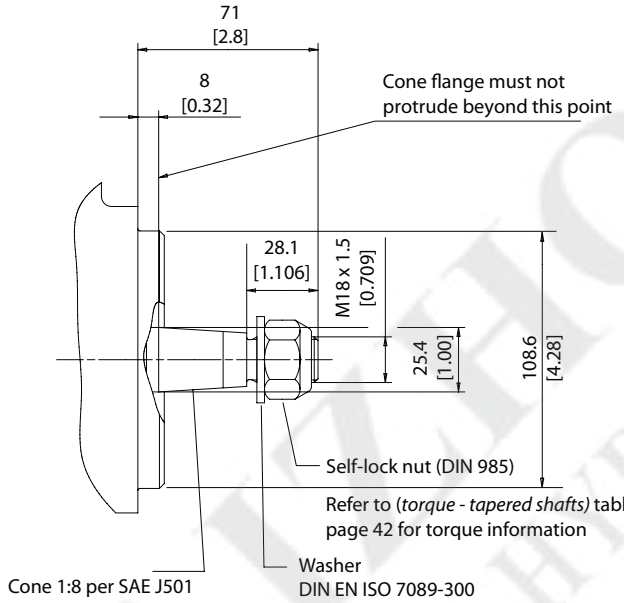

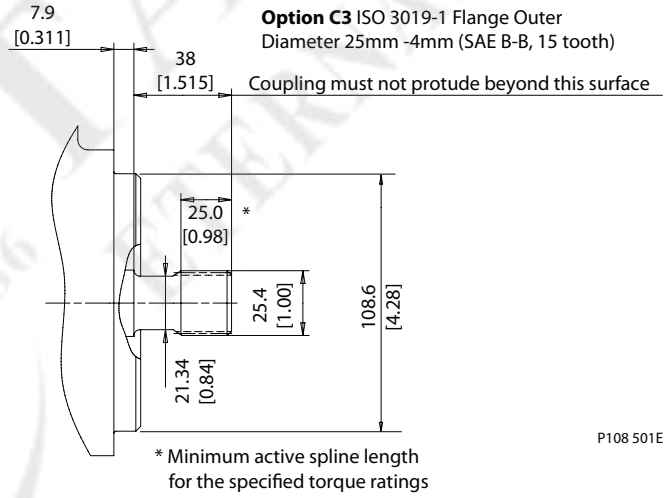

* Minimum active spline length for the specified torque ratings

mm [in]

Frame Size 055

Manual displacement control (MDC), endcap side ports, option 60

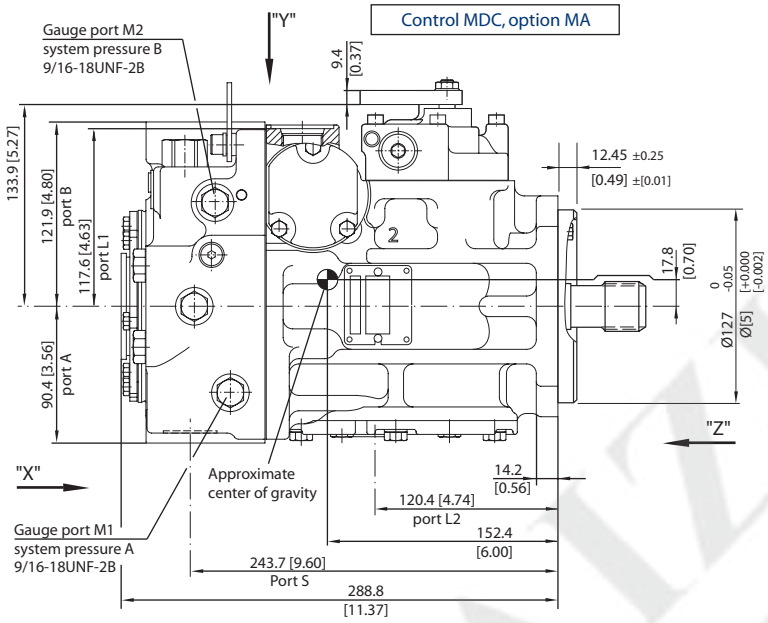

View "Z"

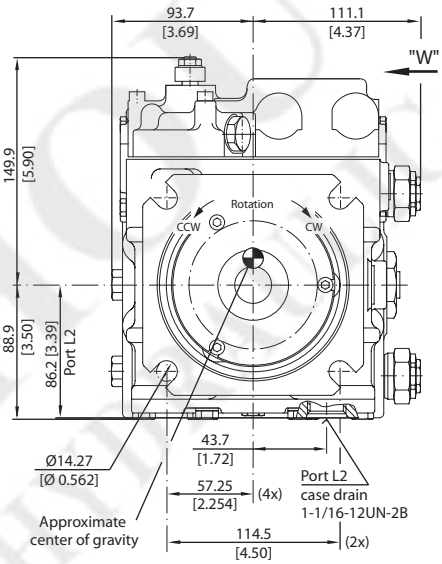

View "Y"

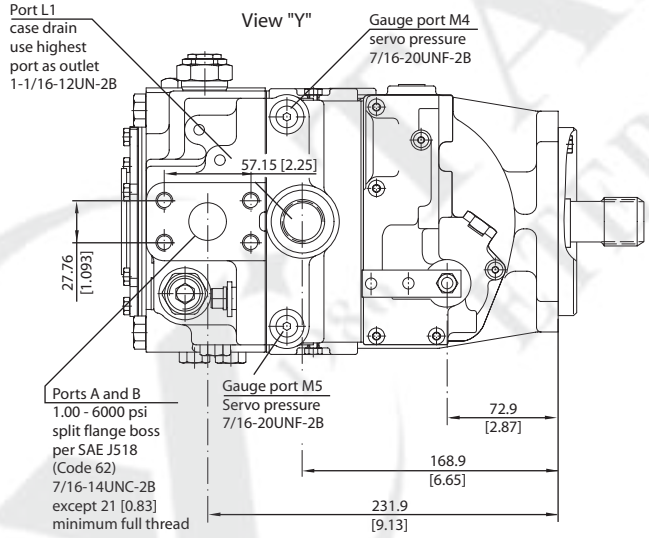

View "X"

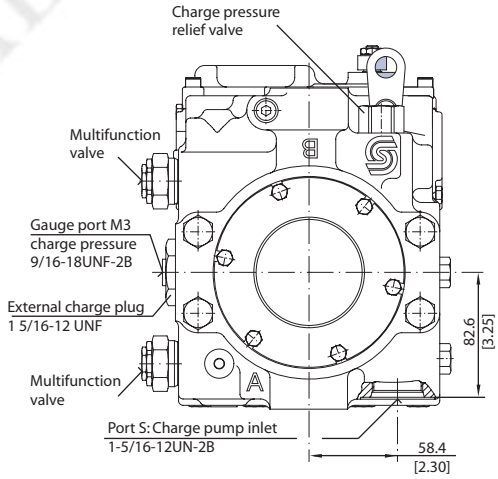

Manual Displacement Control Handle Dimensions

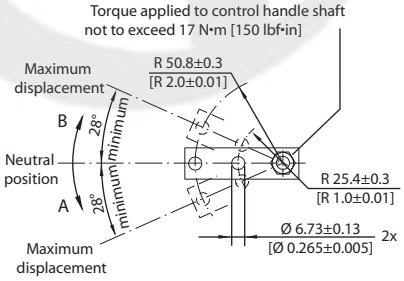

P102 042

mm [in]

Frame Size 055 (continued)

Manual displacement control (MDC) endcap twin ports, option 80

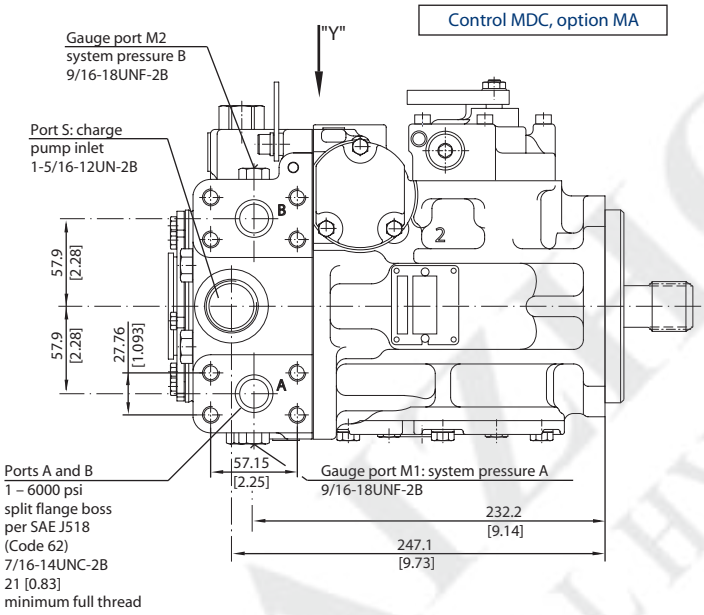

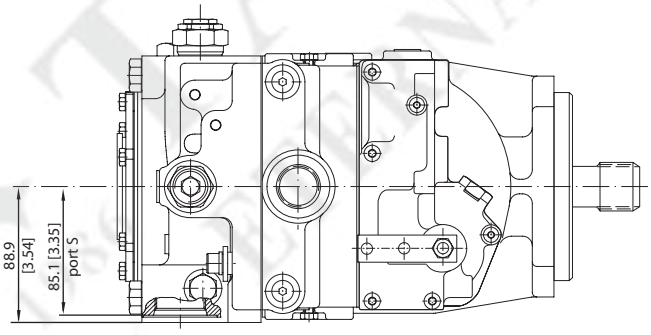

View "Y"

P102 043

mm [in]

Frame Size 055 (continued)

Auxiliary mounting pad – options AB, BC, CD, BB

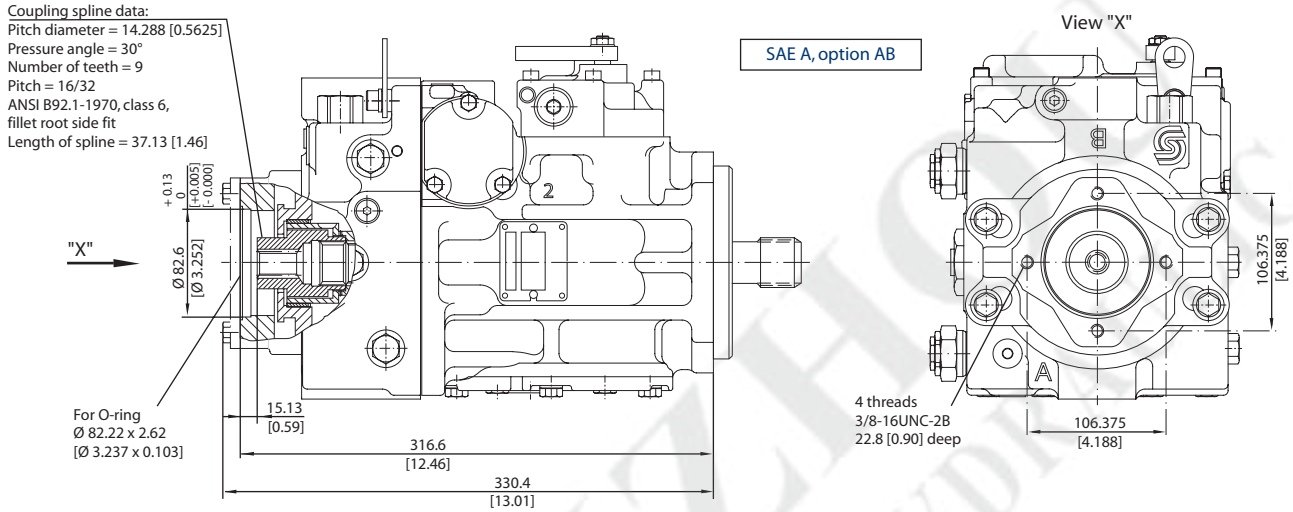

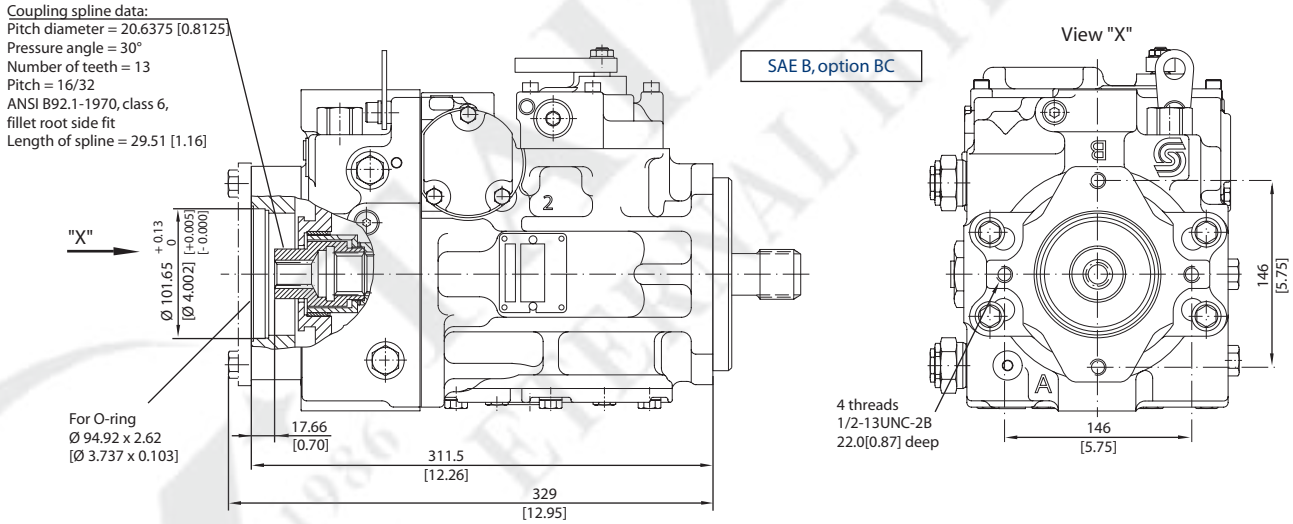

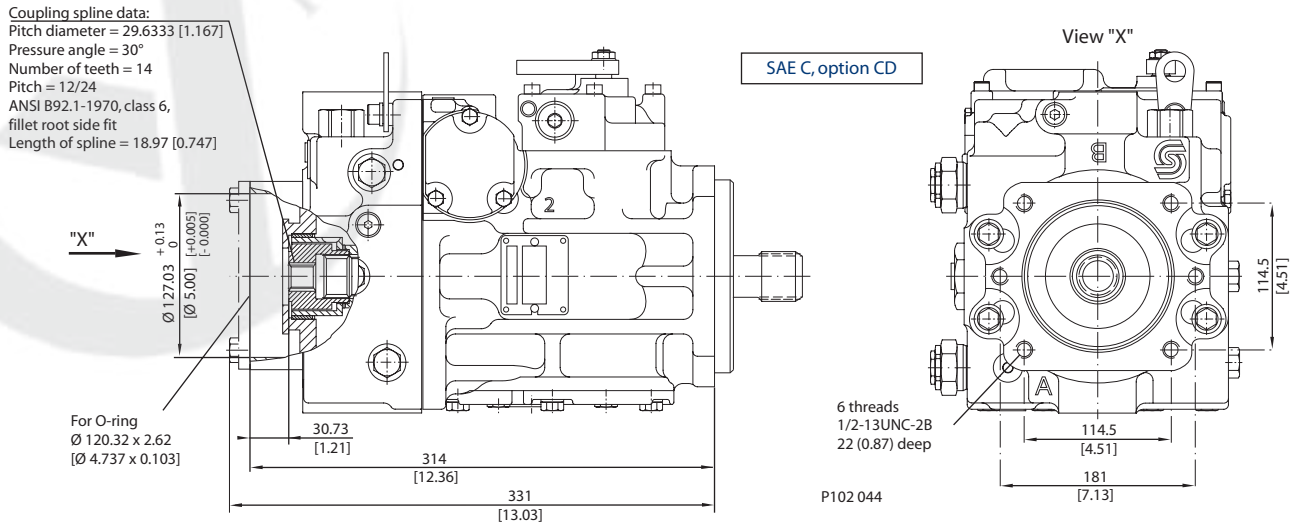

mm [in]

Frame Size 055 (continued)

Auxiliary mounting pad – options AB, BC, CD, BB

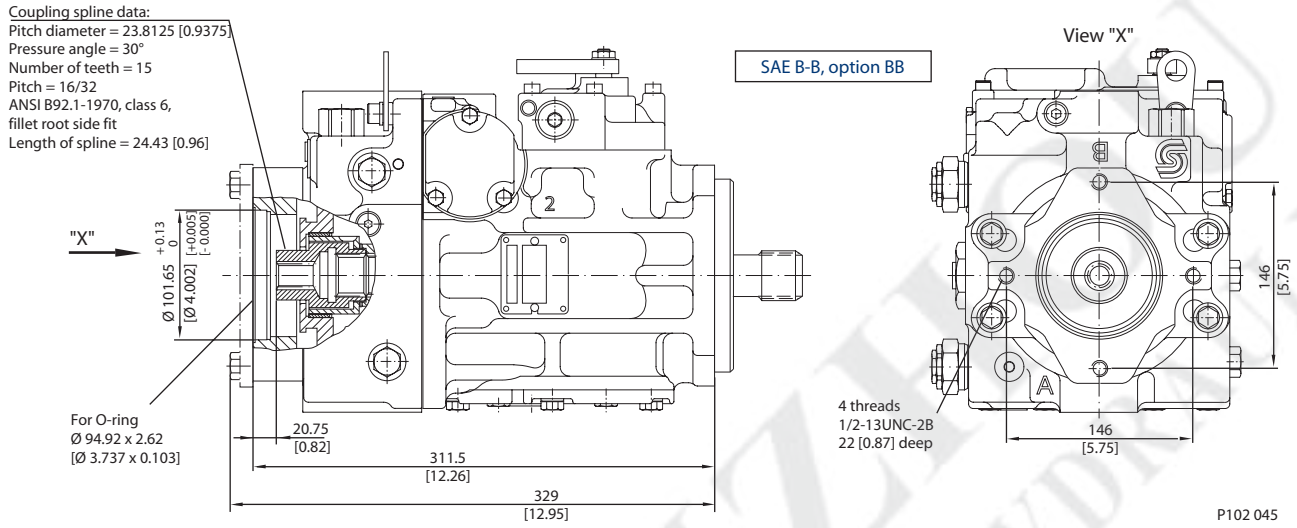

Shaft dimensions

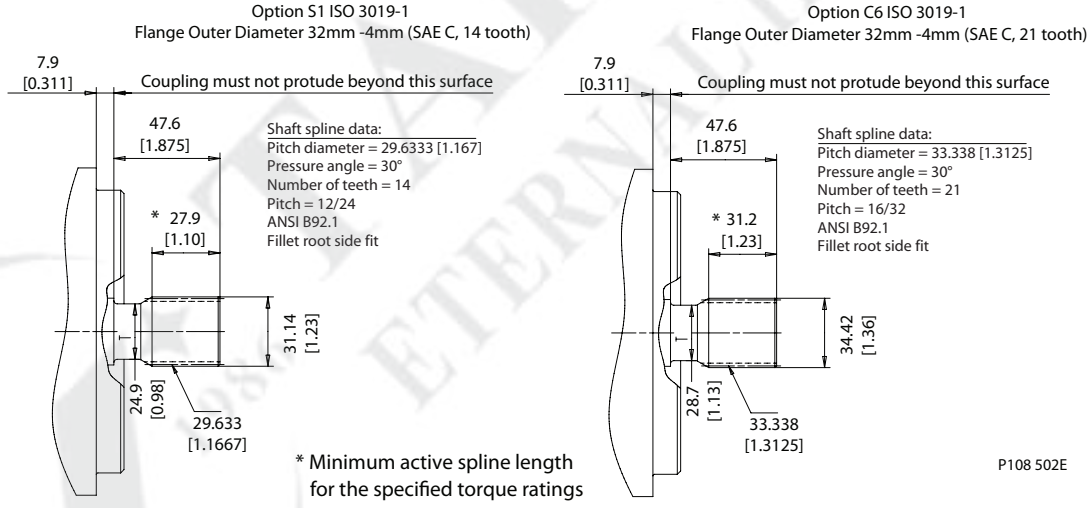

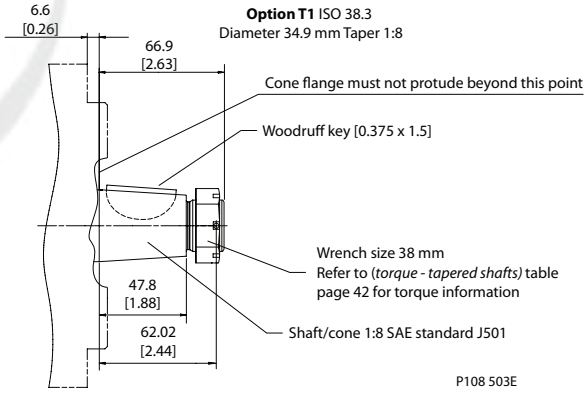

mm [in]

Frame Size 075

Manual Displacement Control (MDC) Endcap Side Ports, Option 60

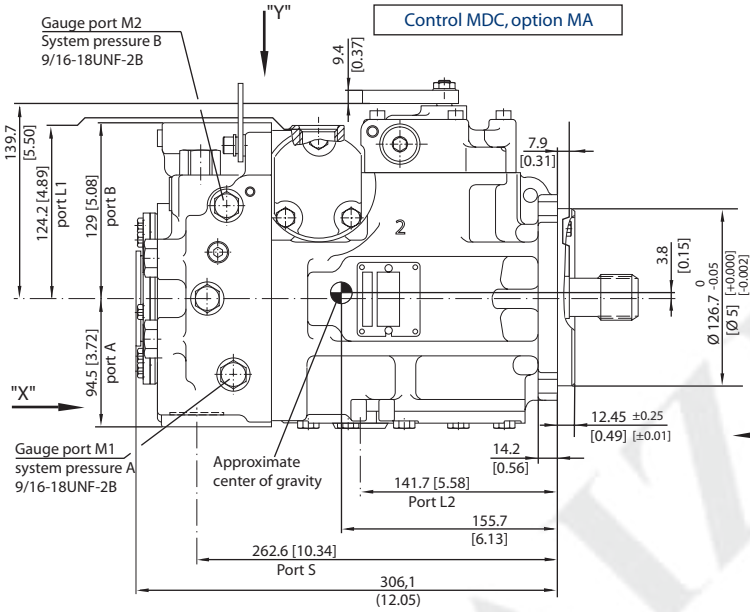

View "Z"

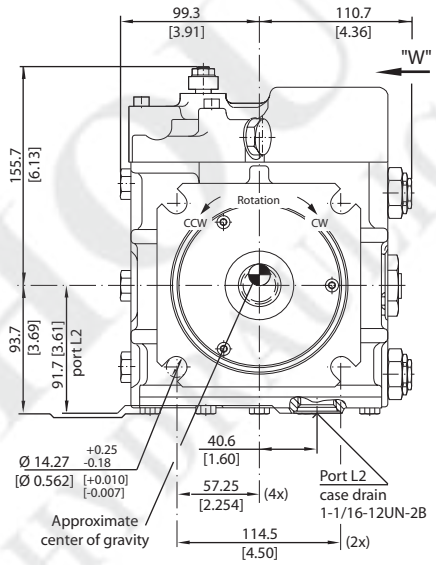

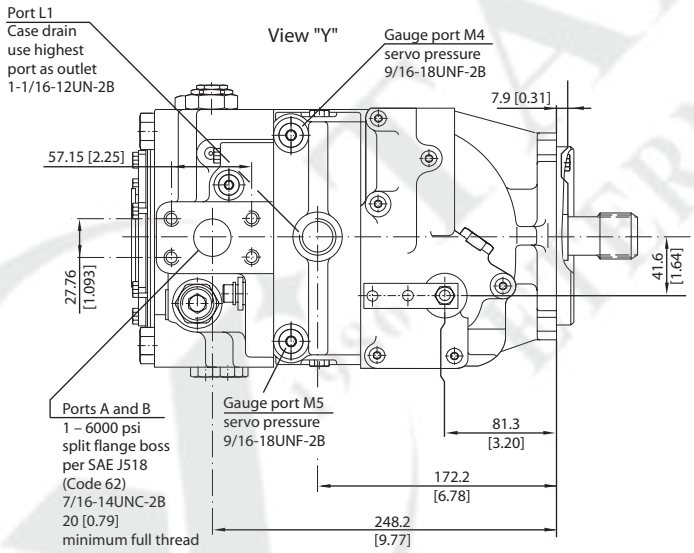

View "X"

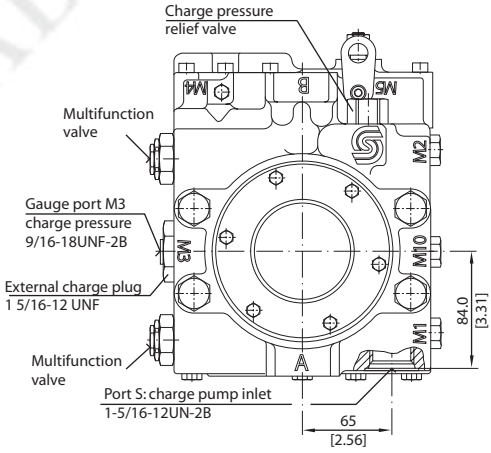

Manual displacement control handle dimensions

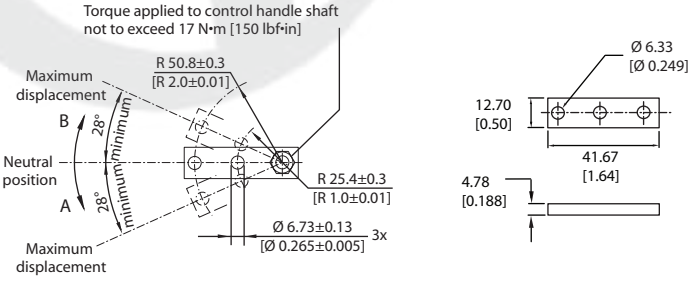

P102 046

mm [in]

Frame Size 075 (continued)

Manual Displacement Control (MDC), endcap twin ports, option 80

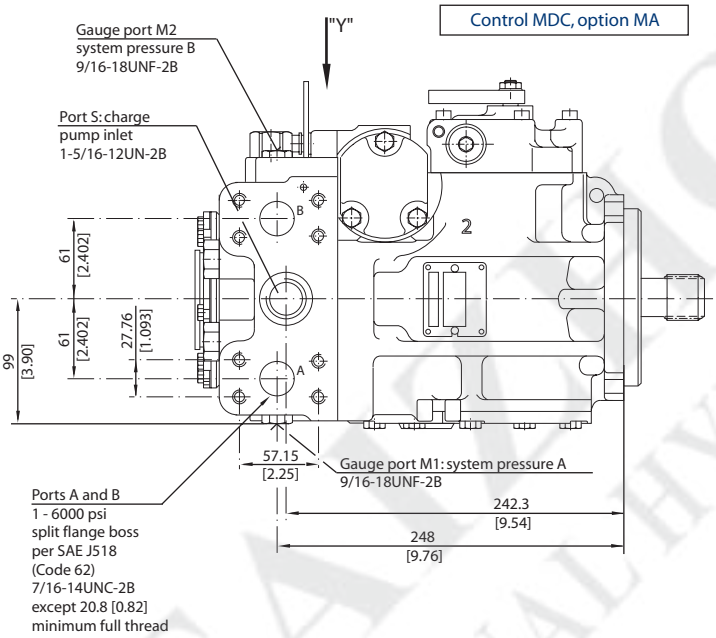

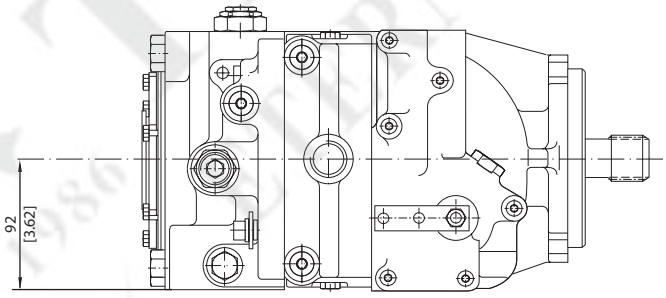

View "Y"

P102 047

mm [in]

Frame Size 075 (continued)

Auxiliary mounting pad – Options AB, BC, CD, BB

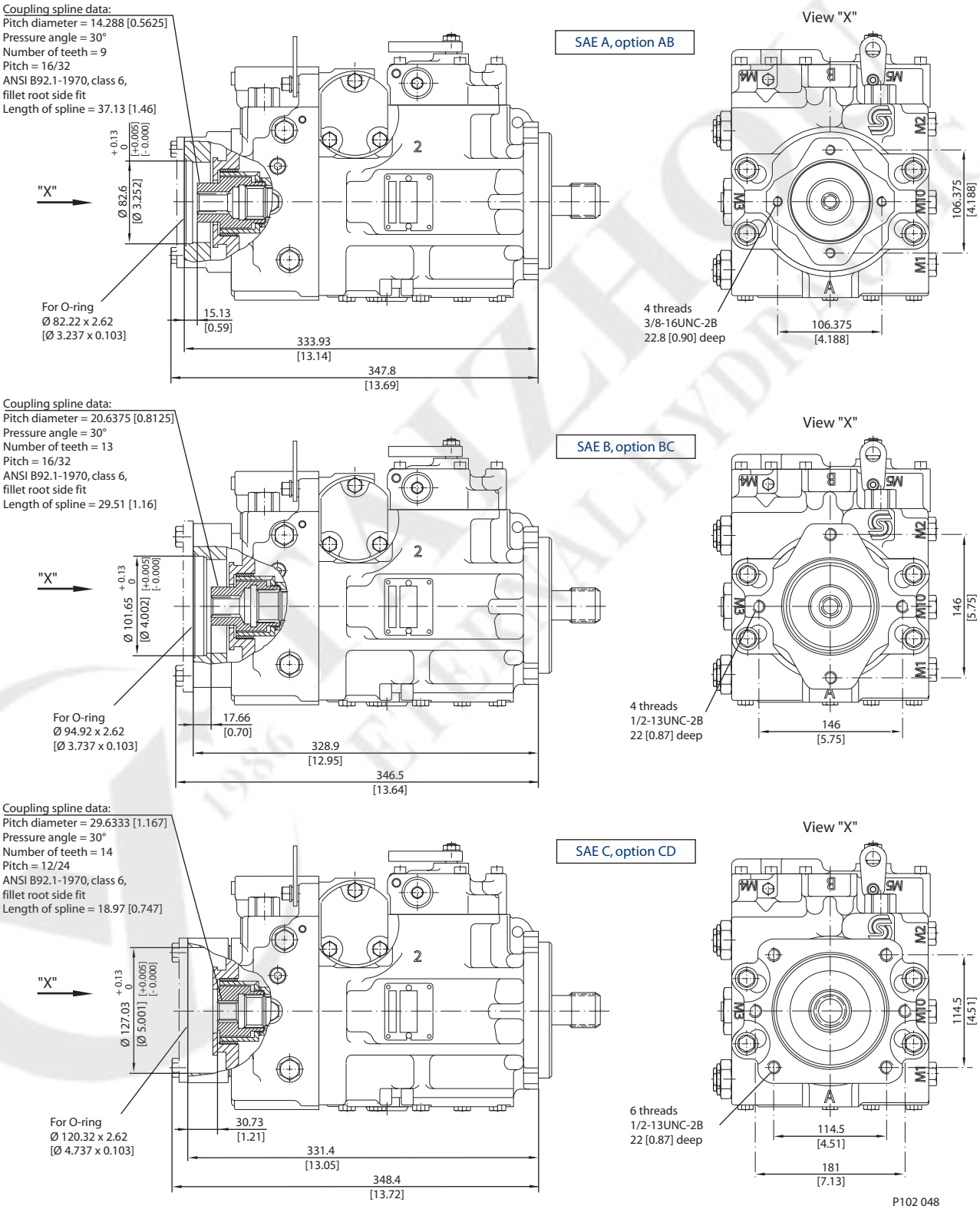

mm [in]

Frame Size 075 (continued)

Auxiliary mounting pad – options AB, BC, CD, BB

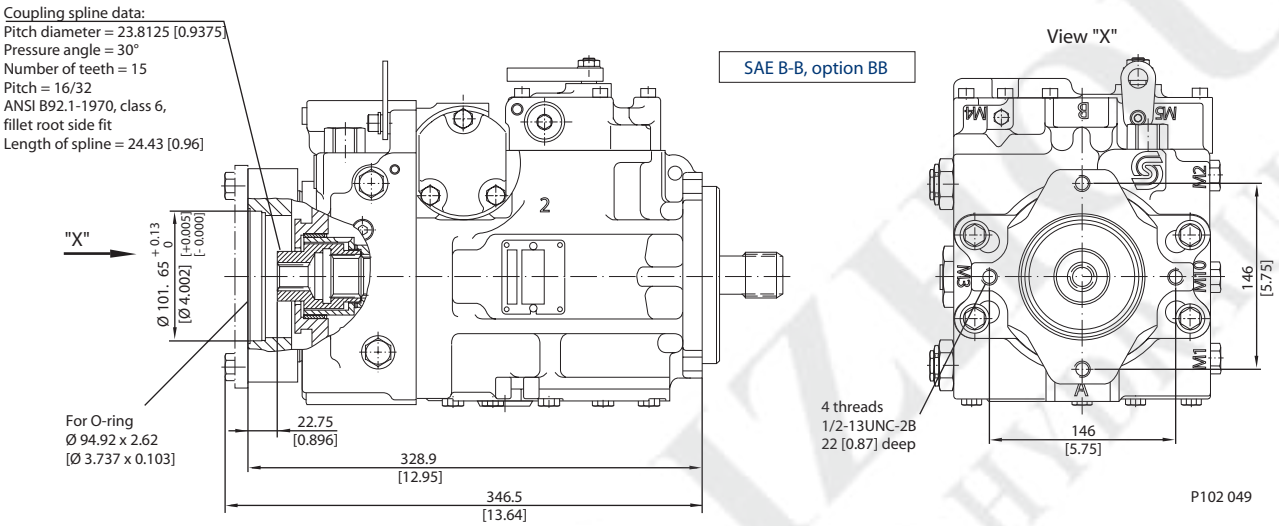

mm [in]

Frame Size 075 NFPE
Options FK, FL, FM, FN

Integrated NFPE control, endcap side ports

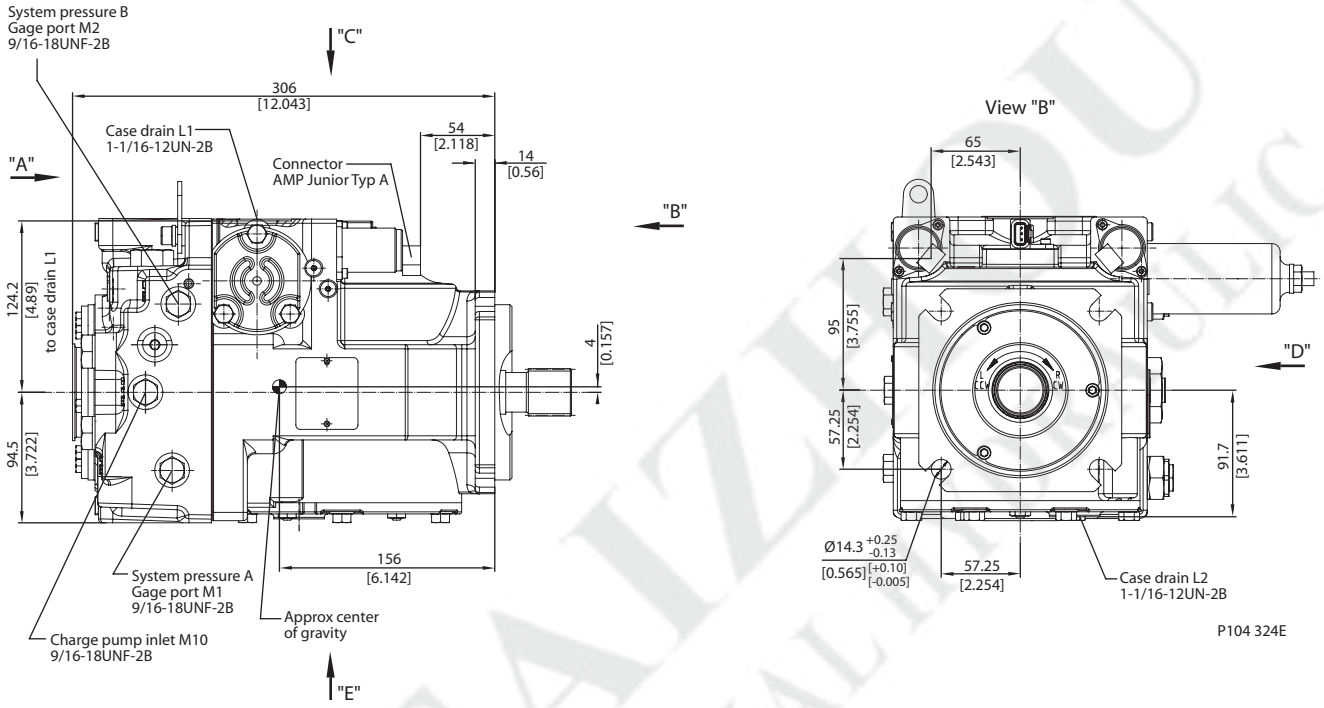

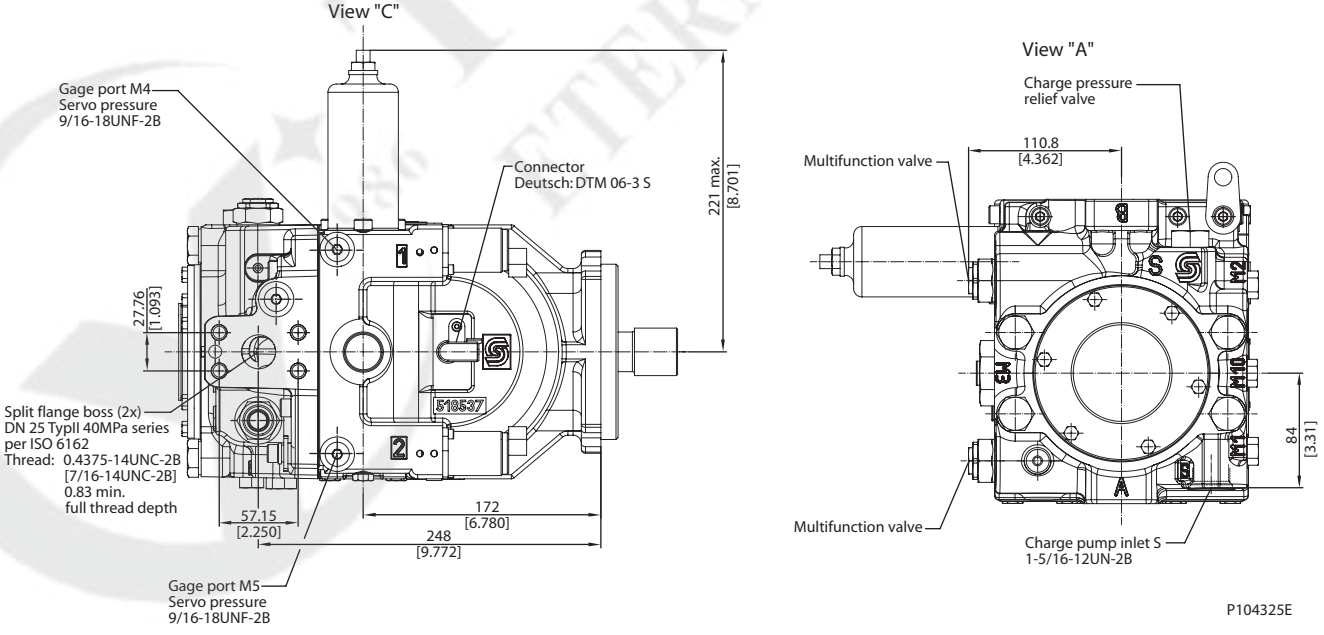

mm [in]

Frame Size 075 NFPE Options FK, FL, FM, FN (continued)

Integrated NFPE control, endcap side ports (continued)

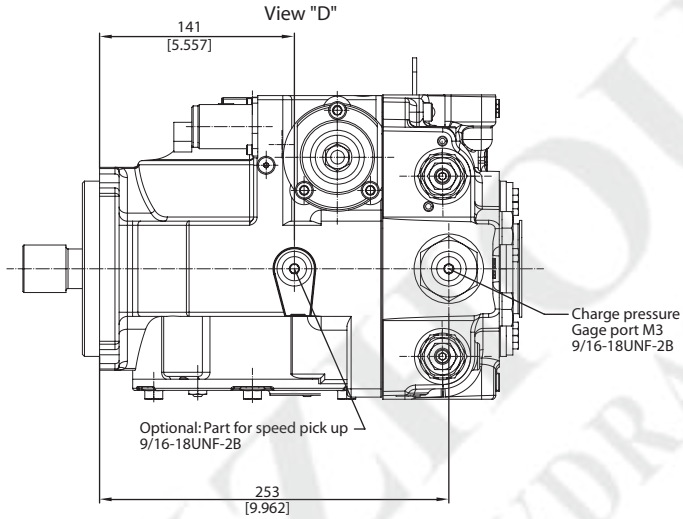

P104 326E

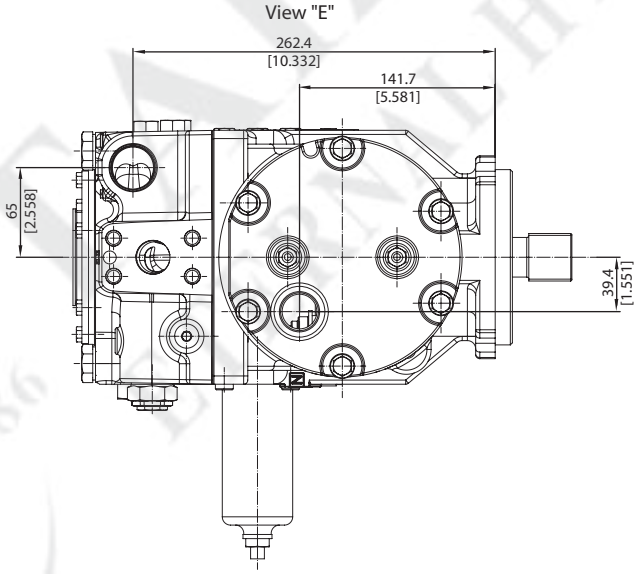

P104 327E

mm [in]

Frame Size 075 NFPE Options FK, FL, FM, FN (continued)

Integrated NFPE control, endcap twin ports

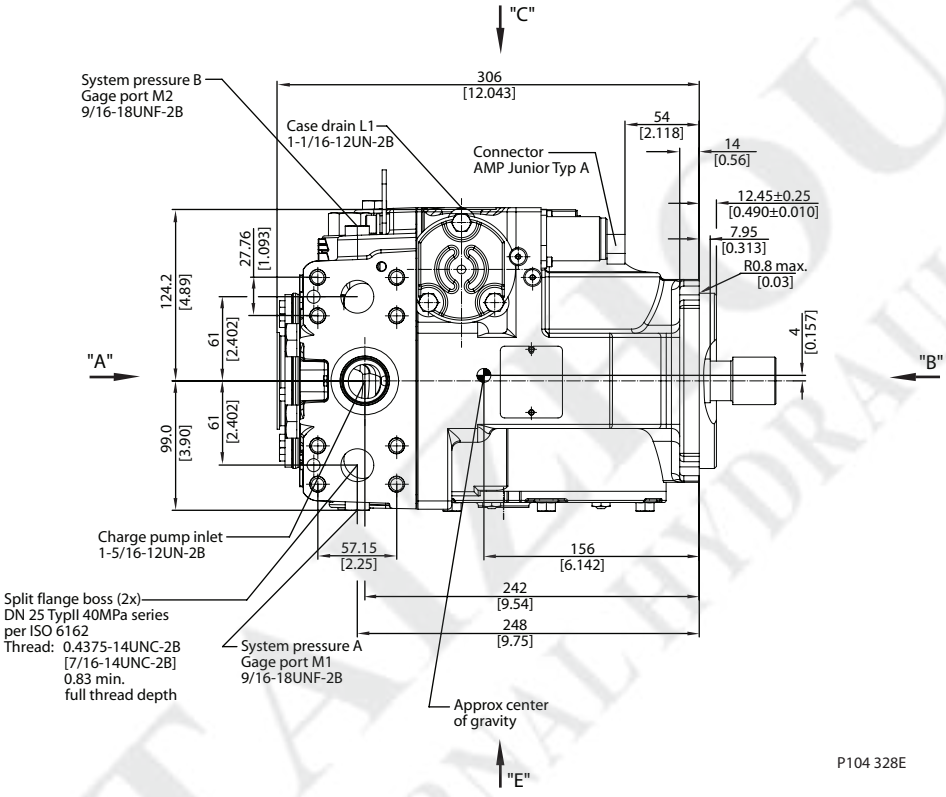

P104 328E

View "C"

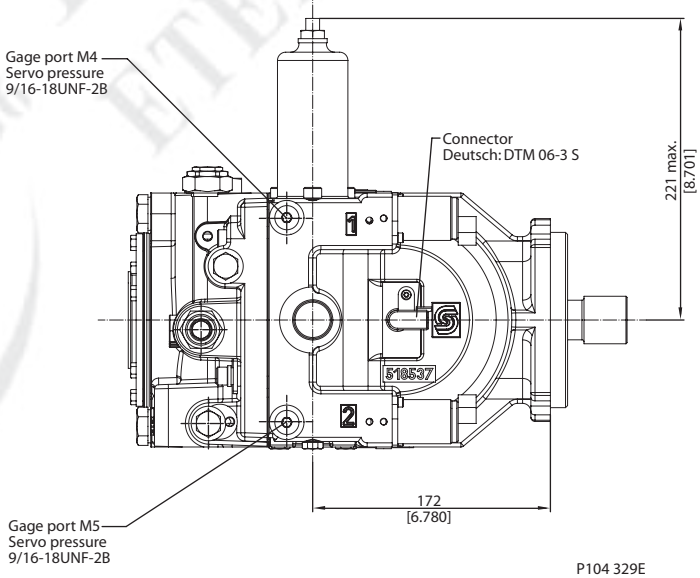

P104 329E

mm [in]

Frame Size 075 (continued)

Shaft dimensions

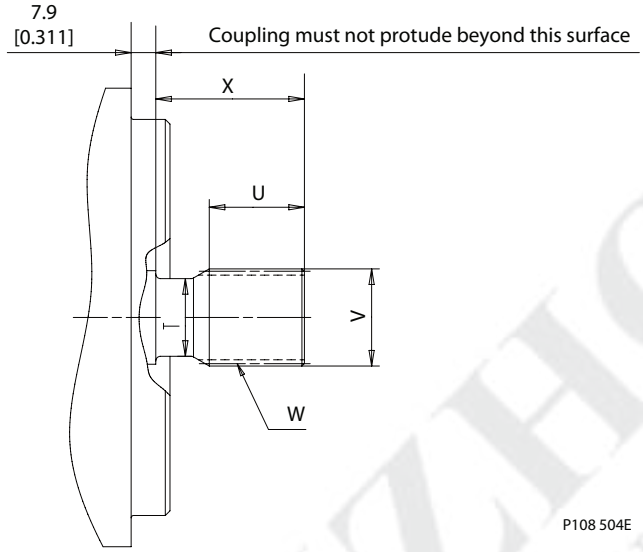

Shaft dimensions

	Undercut Diameter	Full Spline	Major Diameter	Pitch Diameter	Length	Number of Teeth	Pitch	Pressure Angle	Spline	
Shaft Option	**T**	**U***	**V**	**W**	**X**					
C7	31.8 [1.25]	34.8 [1.37]	37.59 [1.48]	36.513 [1.4375]	47.6 [1.875]	23	16/32	30 Degrees	ANSI B92.1	Side fit, Fillet Root
S1	24.9 [0.98]	27.9 [1.10]	31.14 [1.23]	29.633 [1.1667]	47.6 [1.875]	14	112/24	30 Degrees	ANSI B92.1	Side fit, Fillet Root
C6	28.7 [1.13]	31.2 [1.23]	34.42 [1.36]	33.3375 1.3125	47.6 [1.875]	21	16/32	30 Degrees	ANSI B92.1	Side fit, Fillet Root
G1	28.5 [1.12]	34.6 [1.36]	32.93 [1.3]	31.75 [1.25]	47.6 [1.875]	25	20/40	30 Degrees	ANSI B92.1	Side fit, Fillet Root

* Minimum active spline length for the specified torque ratings

Option T6

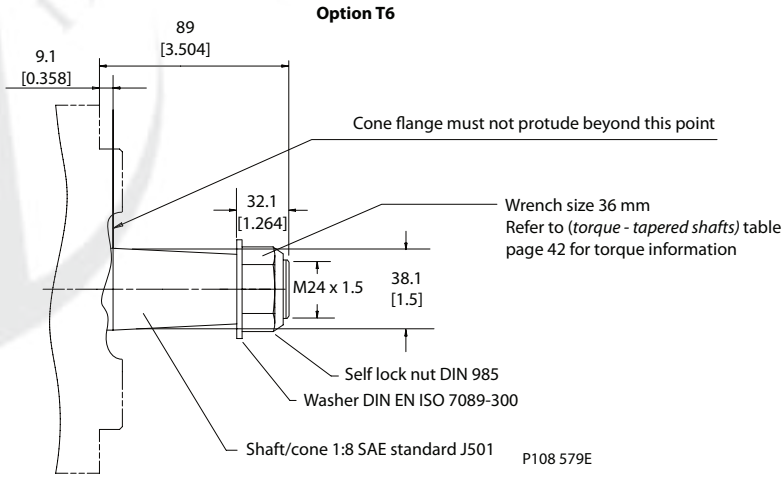

mm [in]

Frame Size 100

Manual Displacement Control (MDC), endcap side ports, option 60

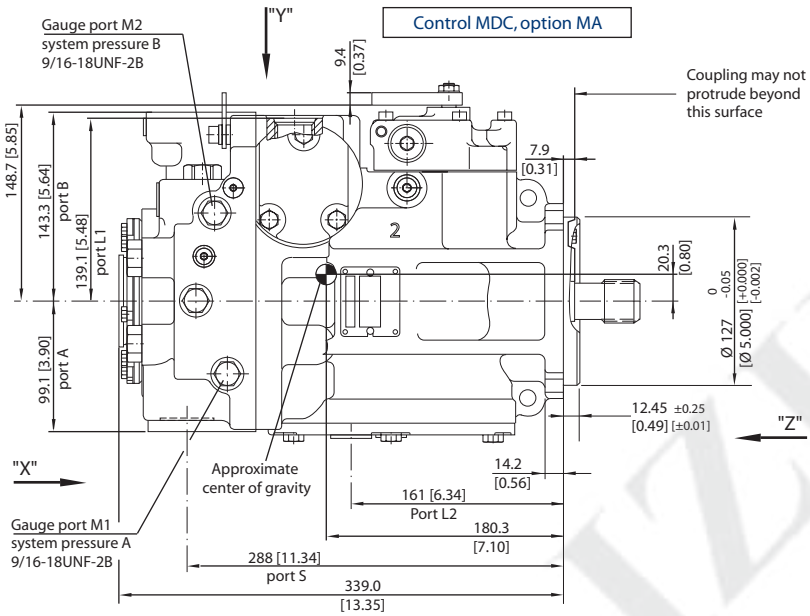

View "Z"

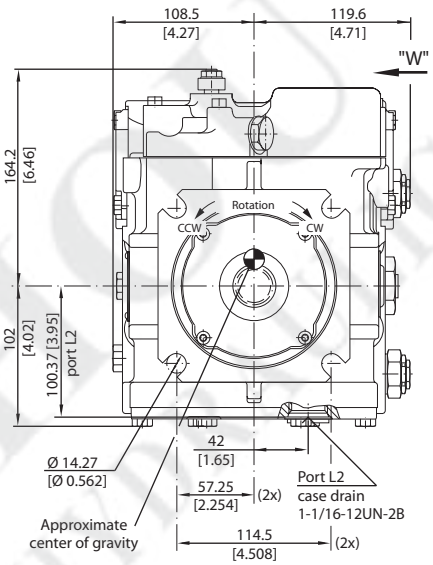

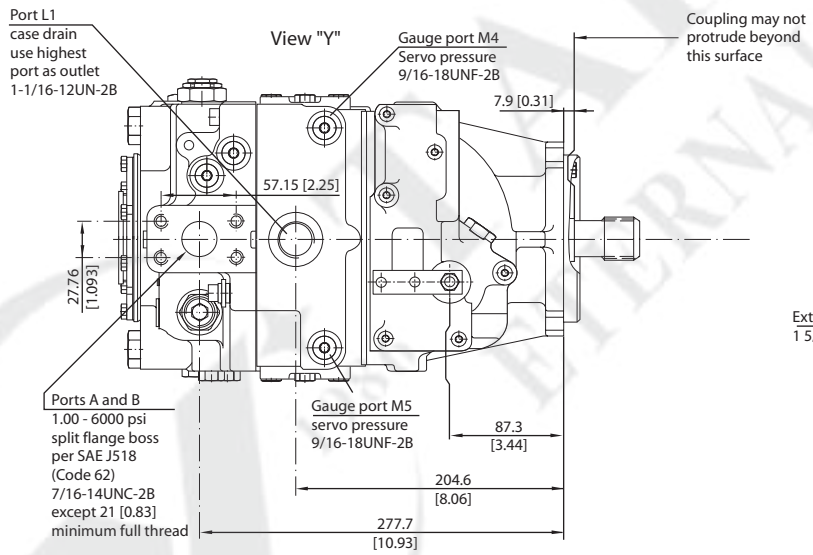

View "X"

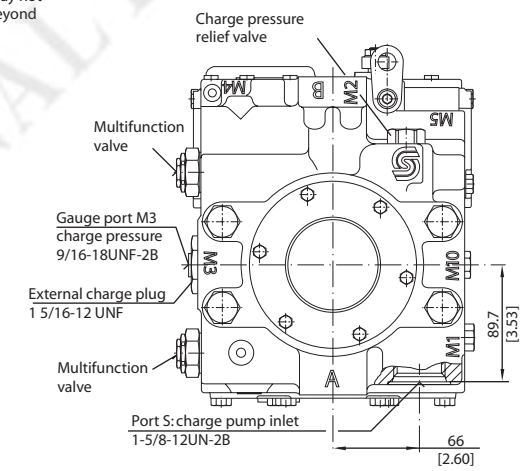

Manual displacement control handle dimensions

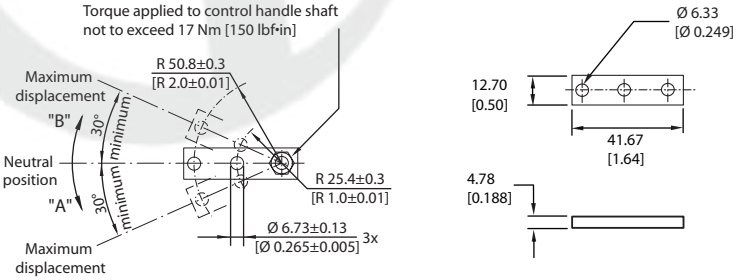

P102 050

mm [in]

Frame Size 100 (continued)

Manual Displacement Control (MDC), endcap twin ports, option 80

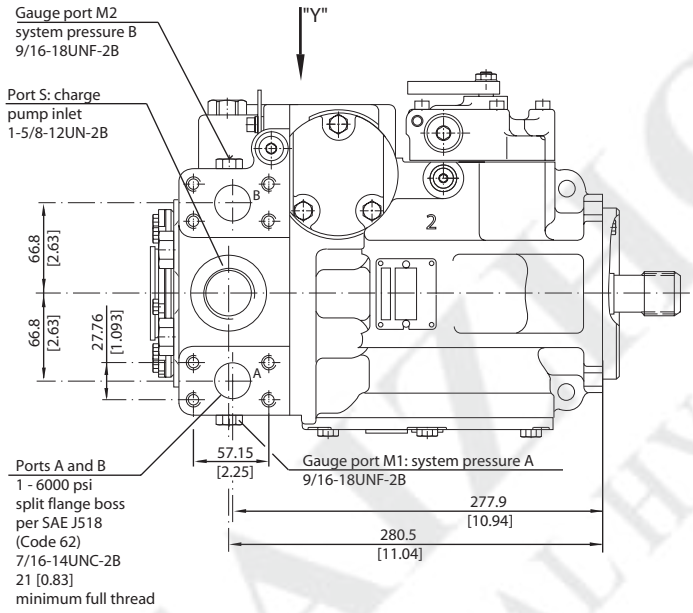

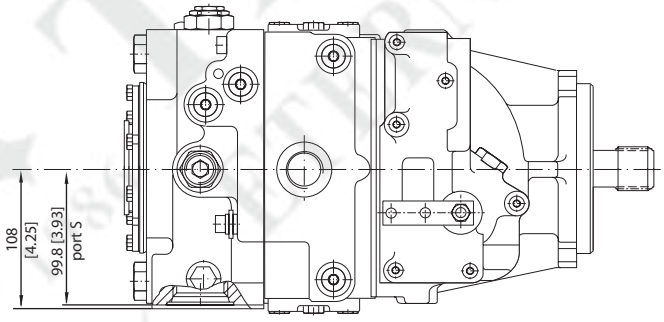

View "Y"

P102 051

mm [in]

Frame Size 100 (continued)

Auxiliary mounting pads, SAE AB, SAE BC, SAE CD

COUPLING SPLINE DATA:
Pitch Dia = 14,288 (.5625)
Pressure Angle = 30
Number of teeth = 9
Pitch = 16/32
ANSI B92.1-1970, Class 6,
Fillet Root Side Fit
Length of spline = 37,13 (1.46)

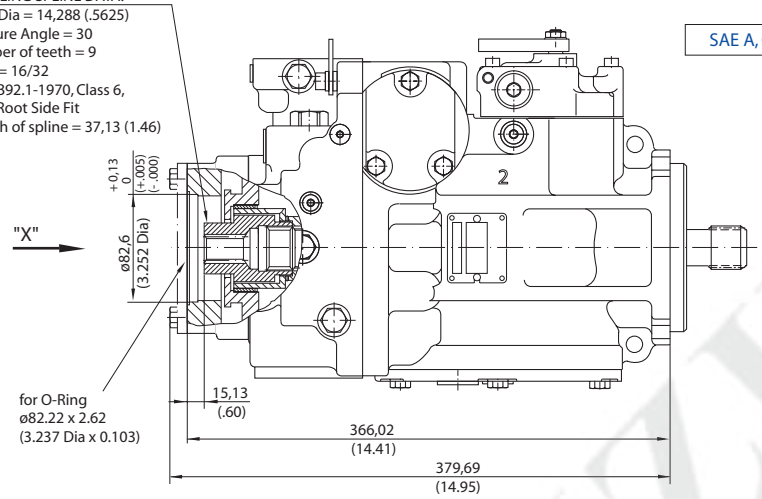

SAE A, Option AB

View "X"

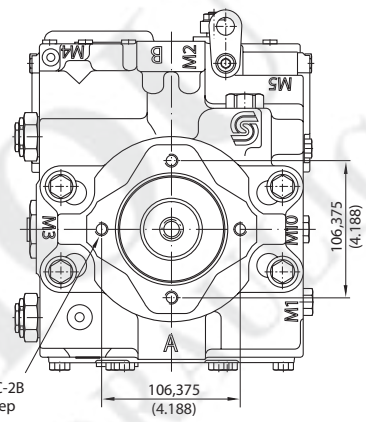

COUPLING SPLINE DATA:
Pitch Dia = 20,6375 (.8125)
Pressure Angle = 30
Number of teeth = 13
Pitch = 16/32
ANSI B92.1-1970, Class 6,
Fillet Root Side Fit
Length of spline = 29,51 (1.16)

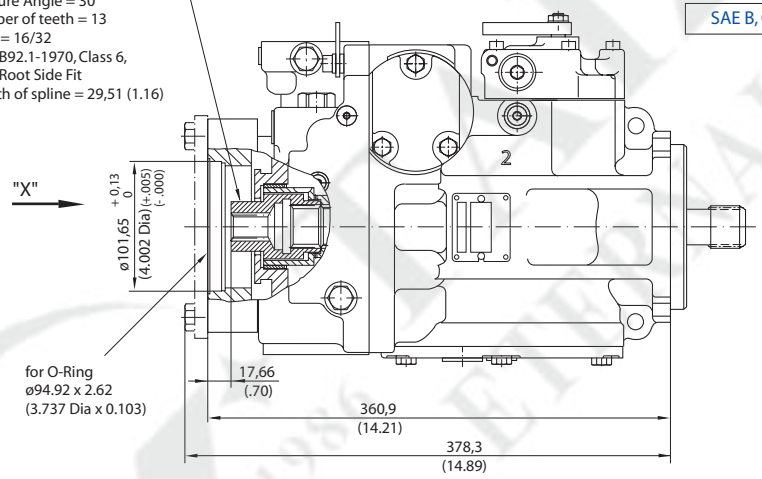

SAE B, Option BC

View "X"

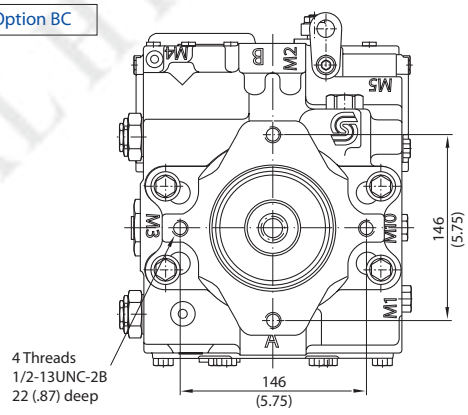

COUPLING SPLINE DATA:
Pitch Dia = 29,6333 (1.167)
Pressure Angle = 30
Number of teeth = 14
Pitch = 12/24
ANSI B92.1-1970, Class 6,
Fillet Root Side Fit
Length of spline = 18,97 (.747)

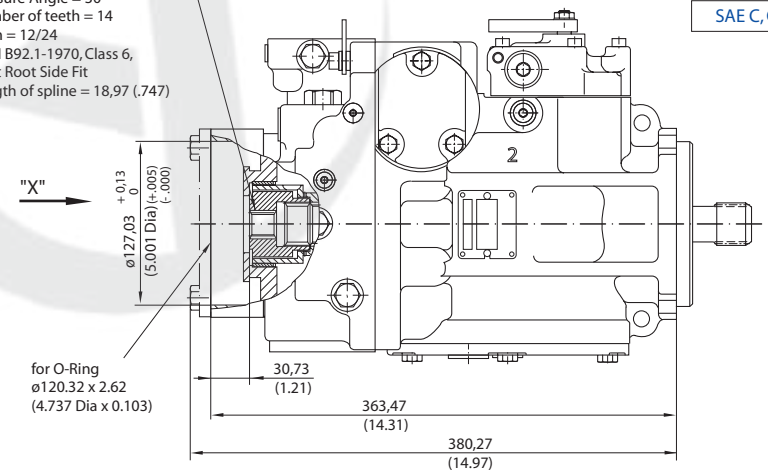

SAE C, Option CD

View "X"

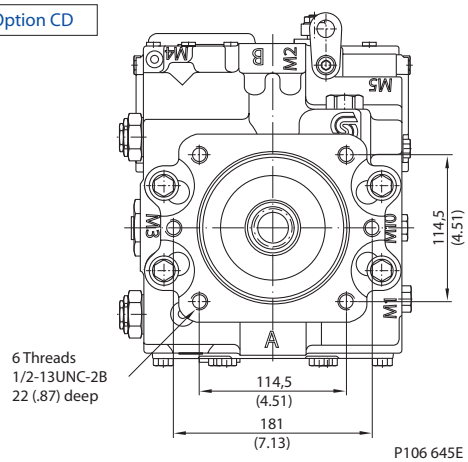

P106 645E

mm [in]

Frame Size 100 (continued)

Auxiliary mounting pad, SAE BB

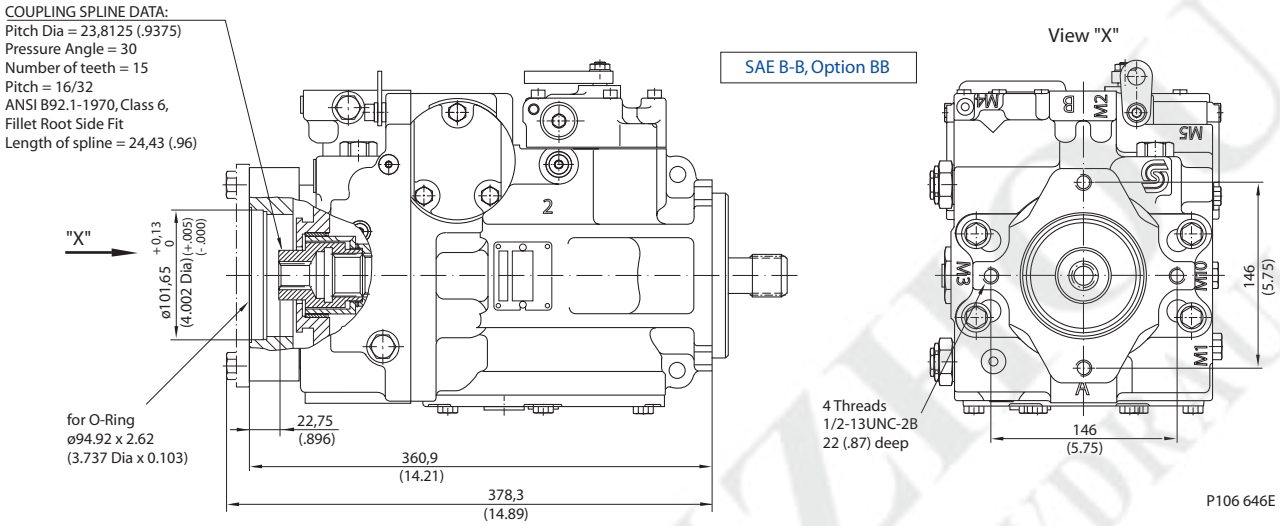

mm [in]

Frame Size 100 (continued)

Shaft dimensions

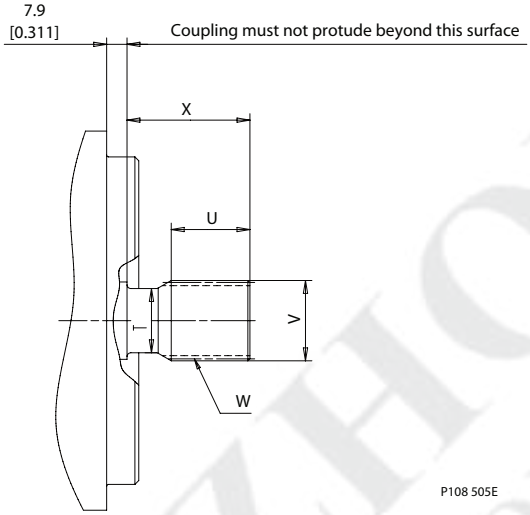

Shaft dimensions

	Undercut Diameter	Full Spline	Major Diameter	Pitch Diameter	Length	Number of Teeth	Pitch	Pressure Angle	Spline	
Shaft Option	**T**	**U***	**V**	**W**	**X**					
C7	32.3 [1.27]	38.9 [1.53]	37.59 [1.48]	36.513 [1.4375]	47.6 [1.875]	23	16/32	30 Degrees	ANSI B92.1	Side fit, Fillet Root
F1	34.5 [1.36]	49.5 [1.95]	43.94 [1.73]	41.275 [1.825]	66.7 [2.625]	13	8/16	30 Degrees	ANSI B92.1	Side fit, Fillet Root
S1	24.9 [0.98]	30.5 [1.20]	31.14 [1.2258]	29.634 [1.1667]	47.6 [1.875]	14	12/24	30 Degrees	ANSI B92.1	Side fit, Fillet Root
C6								30 Degrees	ANSI B92.1	Side fit, Fillet Root

* Minimum active spline length for the specified torque ratings

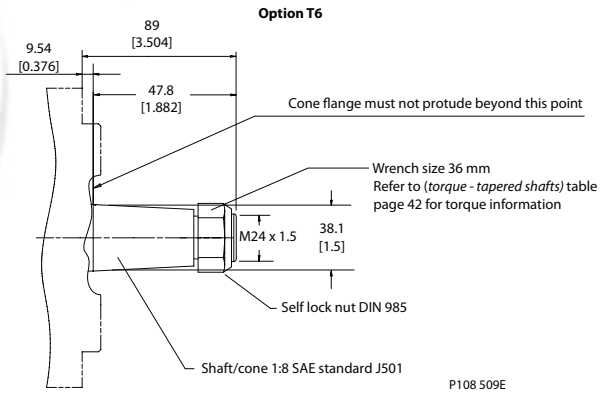

mm [in]

Frame Size 130

Manual Displacement Control (MDC), end cap twin ports, option 80

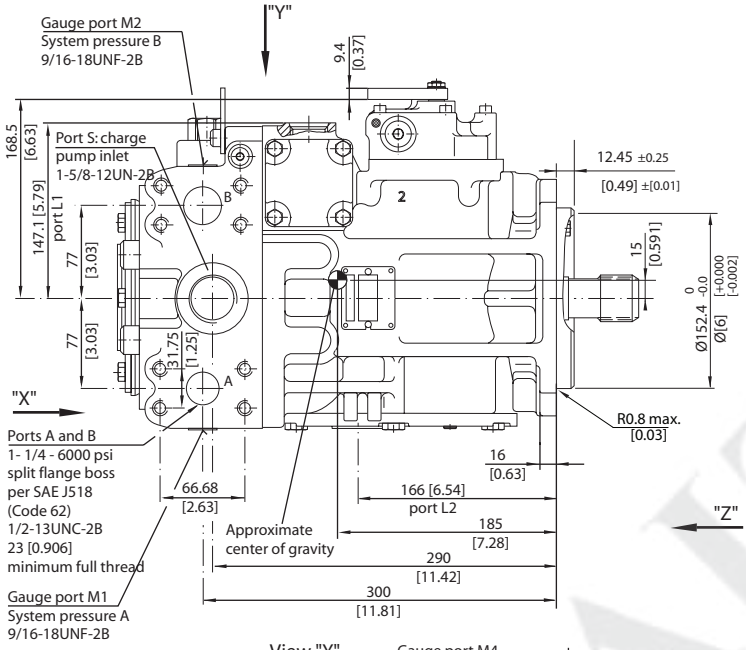

View "Z"

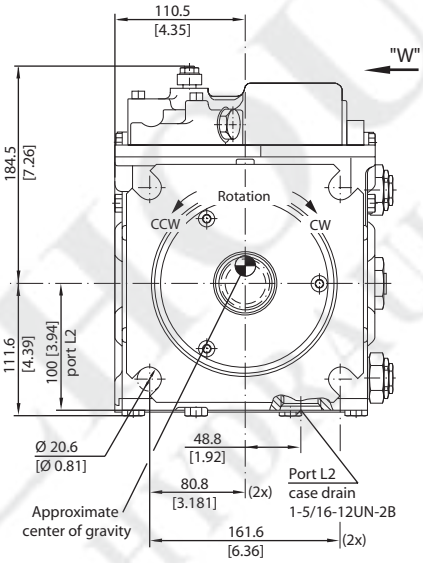

View "Y"

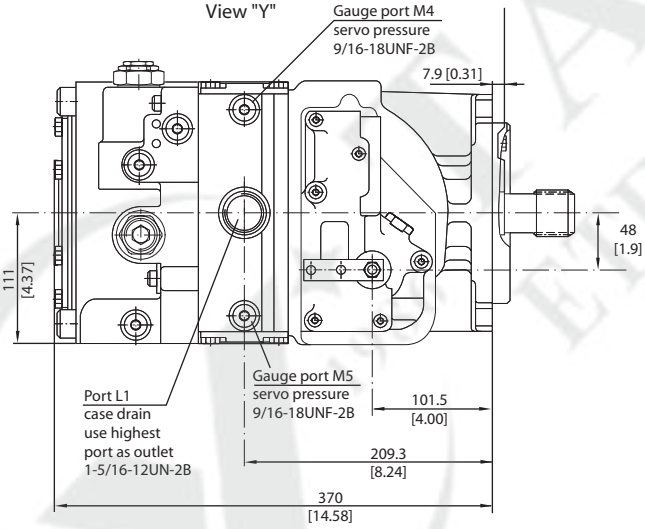

View "X"

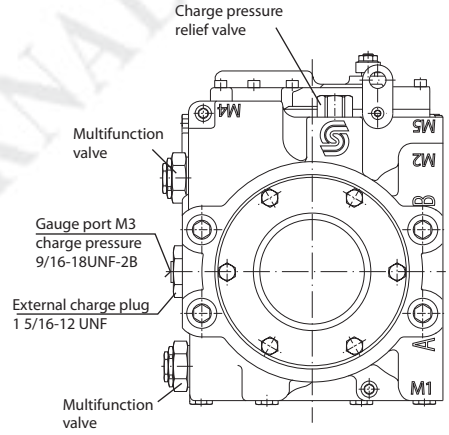

Manual displacement control handle dimensions

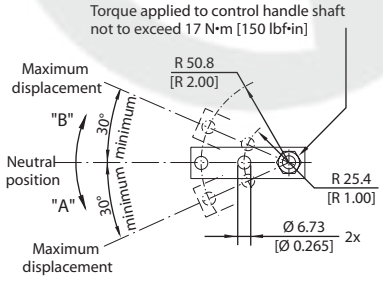

P102 052

mm [in]

Frame Size 130 (continued)

Auxiliary mounting pad - options AB, BC, CD, DE, BB

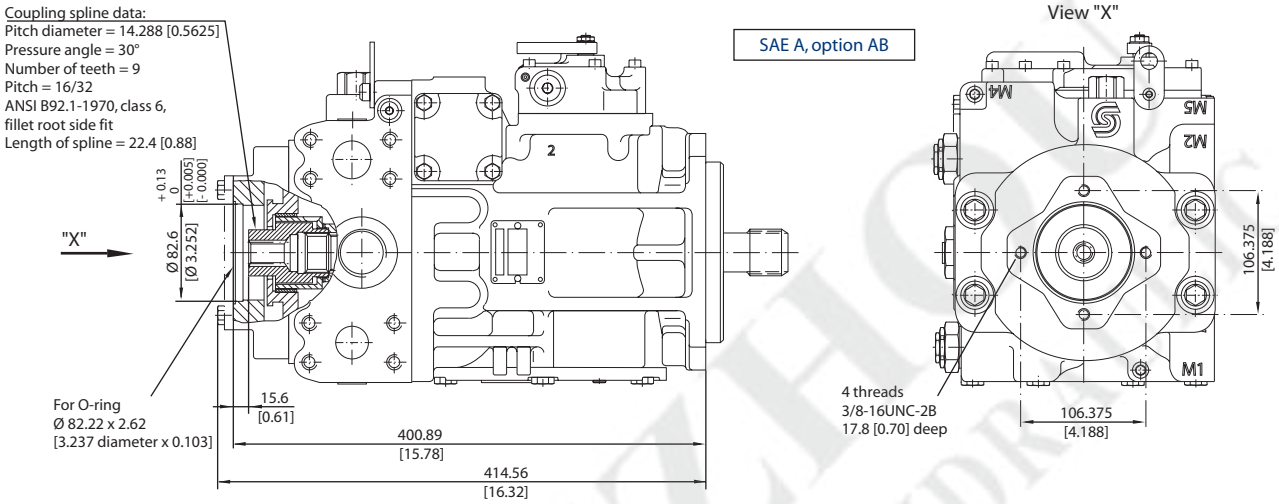

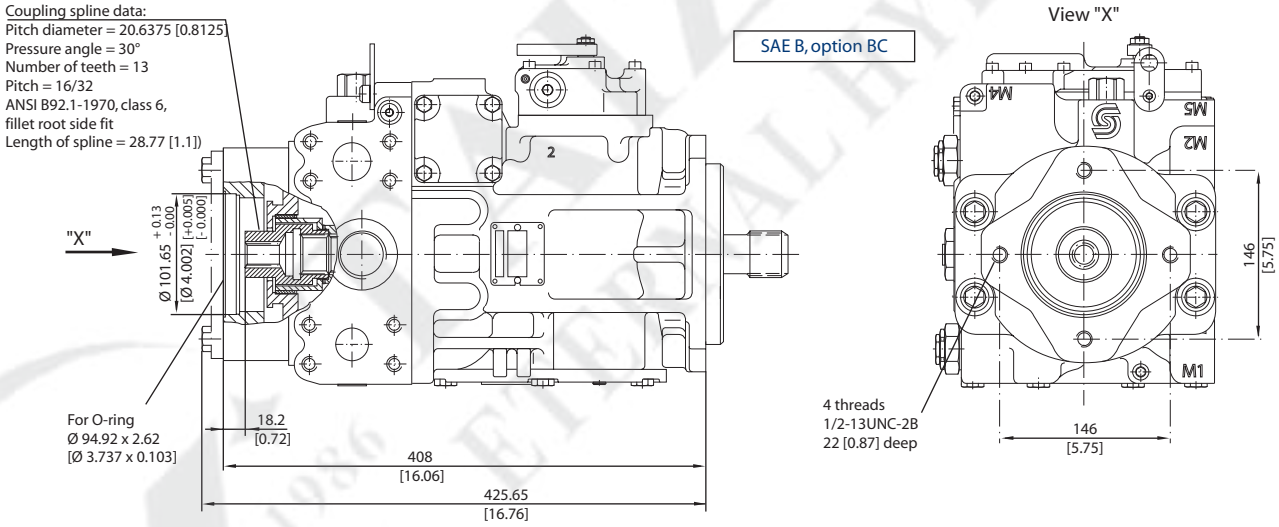

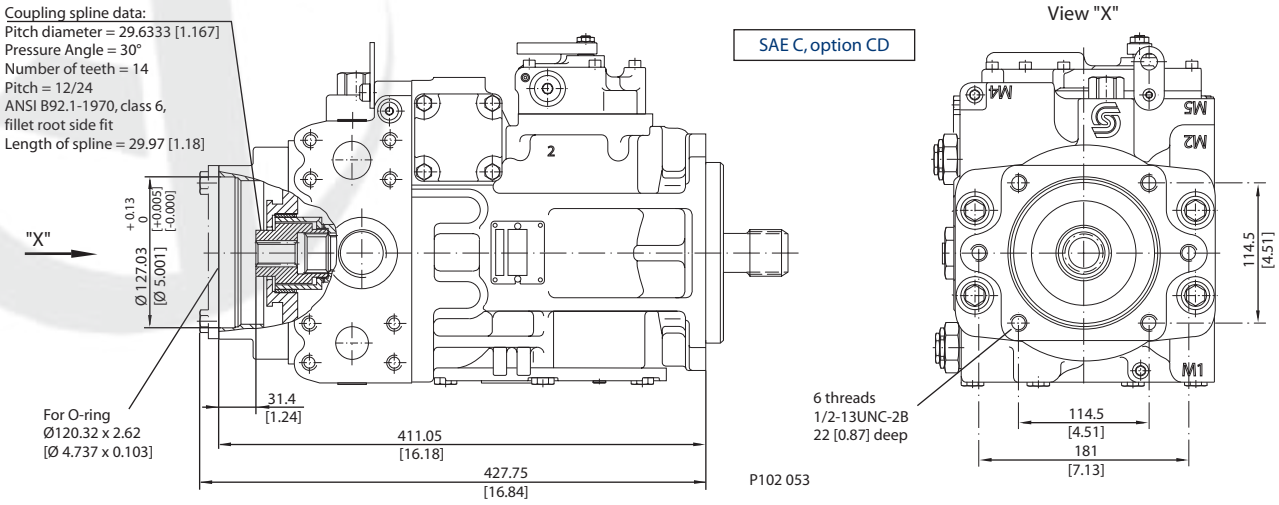

mm [in]

Frame Size 130 (continued)

Auxiliary mounting pad - options AB, BC, CD, DE, BB

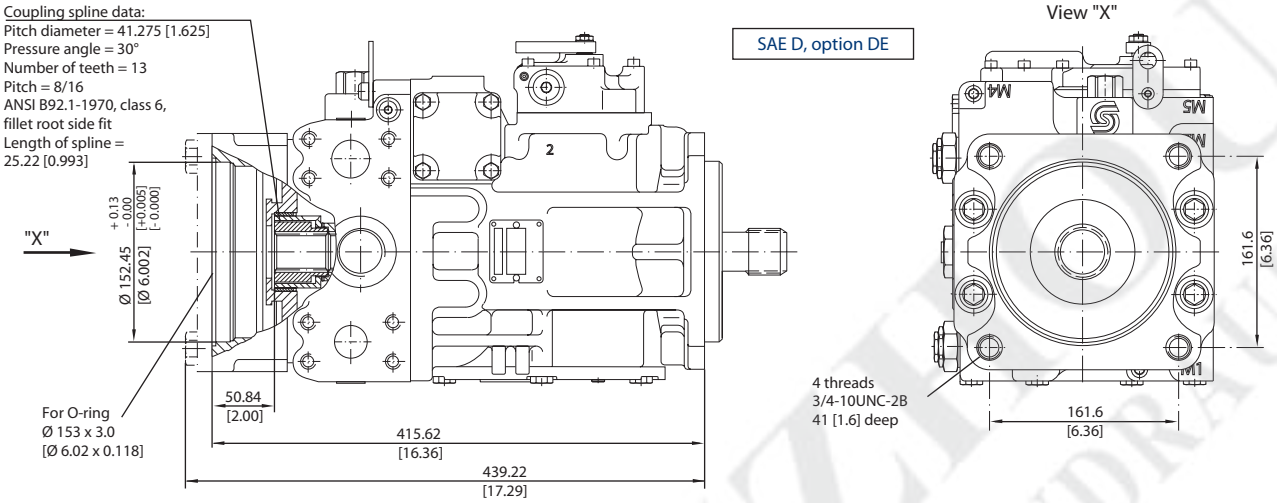

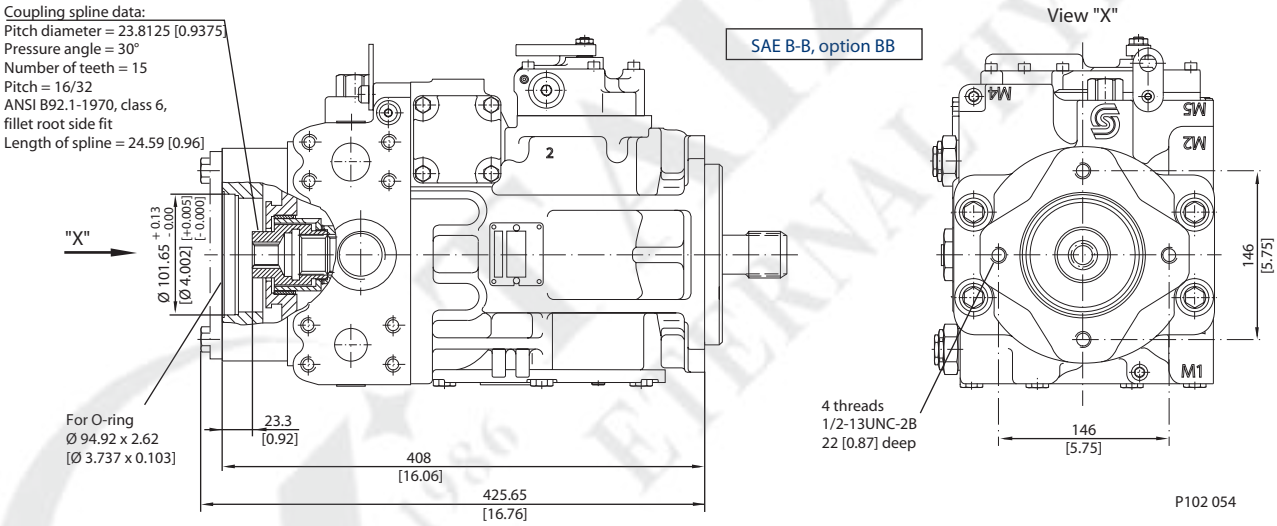

mm [in]

Frame Size 130 (continued)

Shaft dimensions

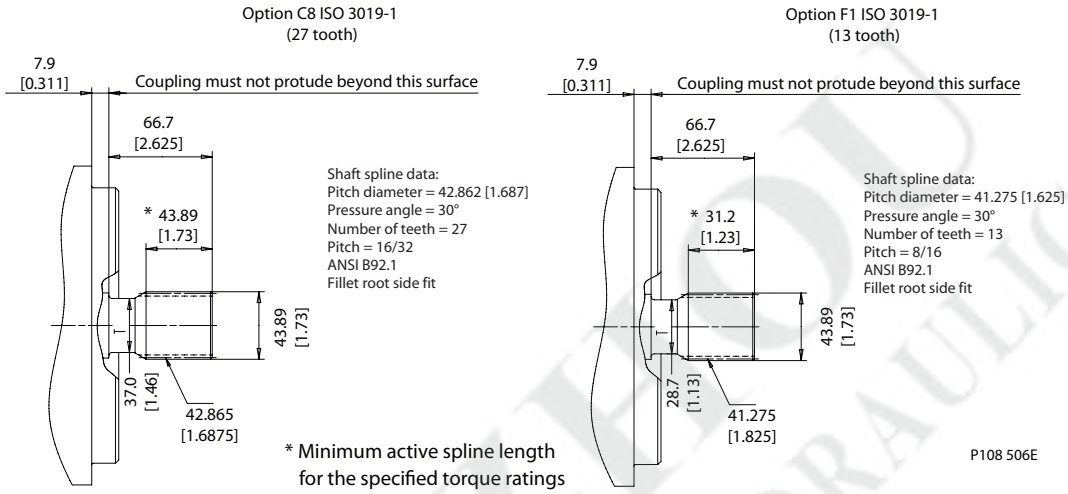

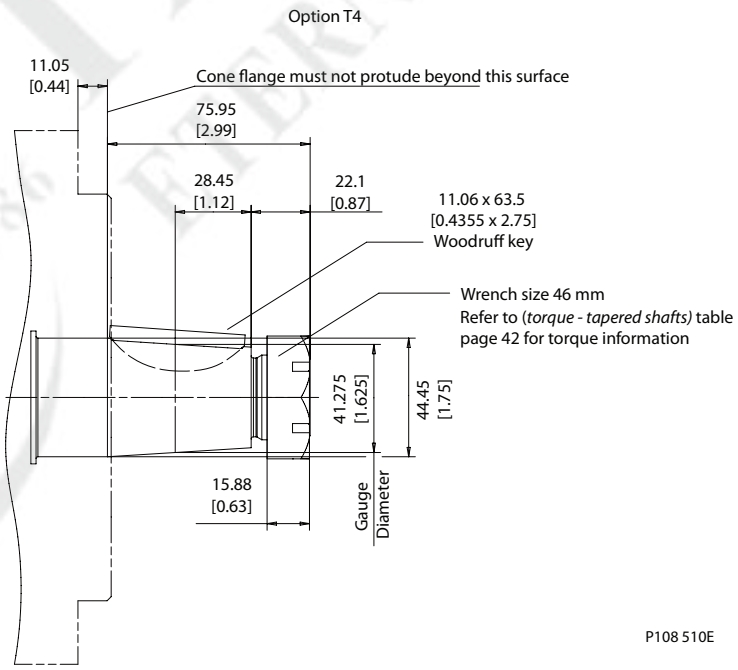

mm [in]

Frame Size 180

Manual Displacement Control (MDC), end cap twin ports, option 80

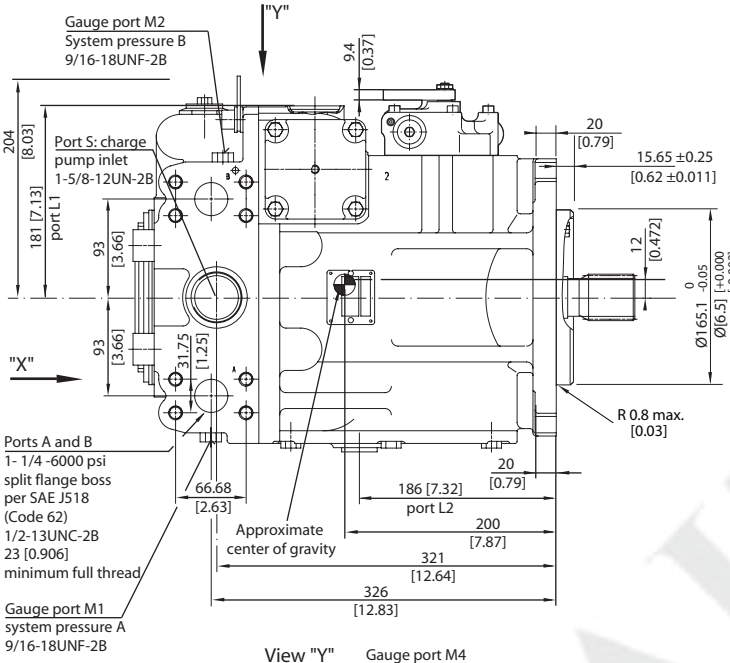

View "Z"

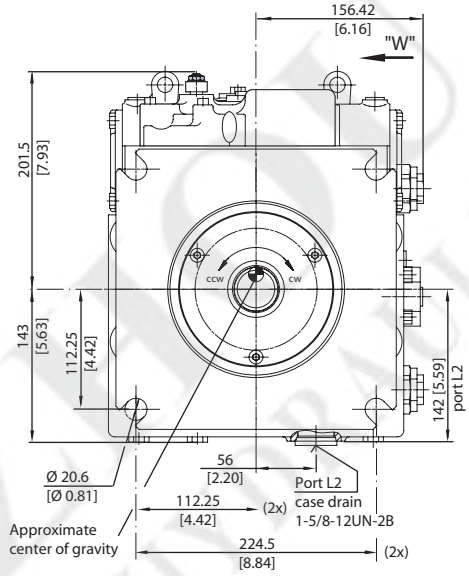

View "Y"

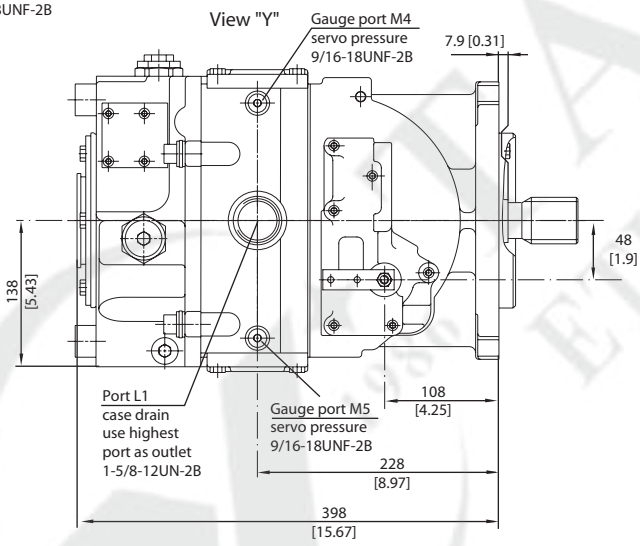

View "X"

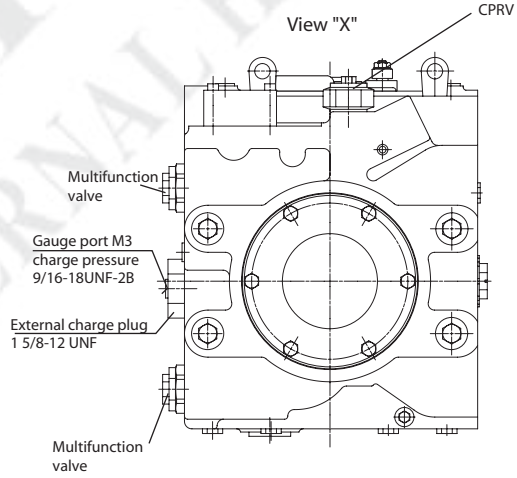

View "W"

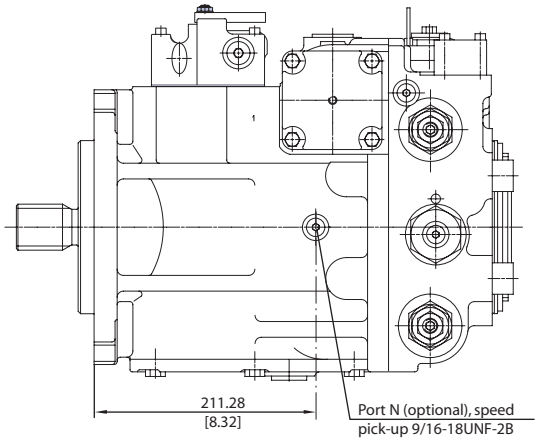

Manual displacement control handle dimensions

Torque applied to control handle shaft not to exceed 17 Nm [150 lbf•in]

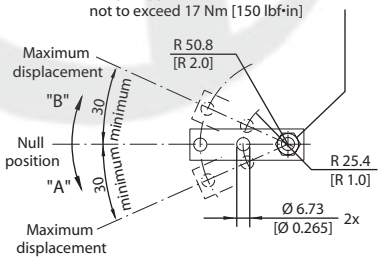

P102 057

mm [in]

Frame Size 180 (continued)

Auxiliary mounting pad - options AB, BC, CD, DE, EF, EG, BB

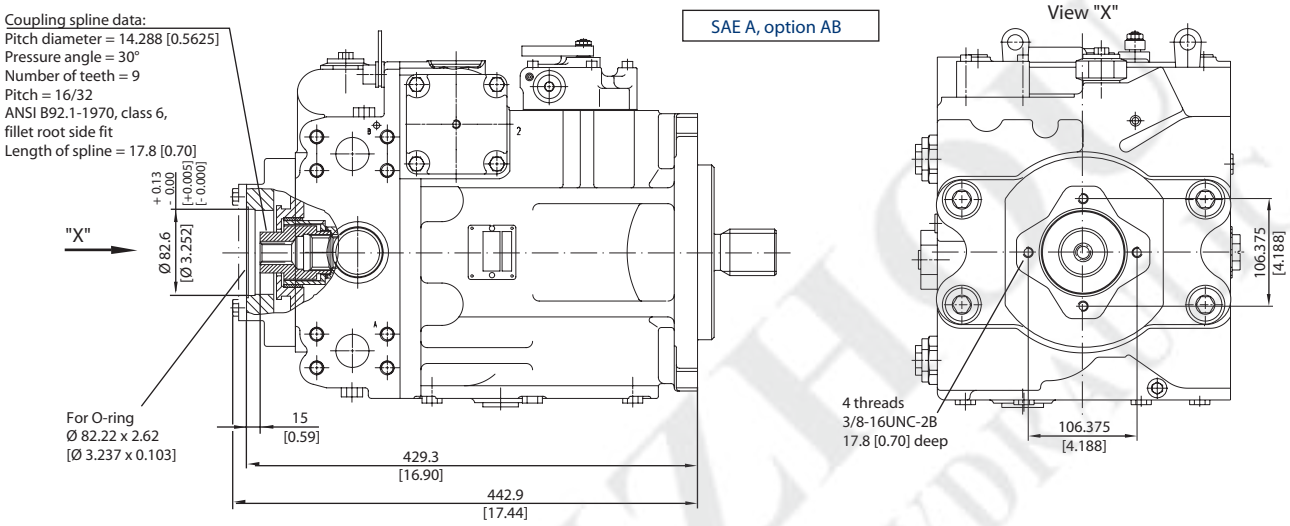

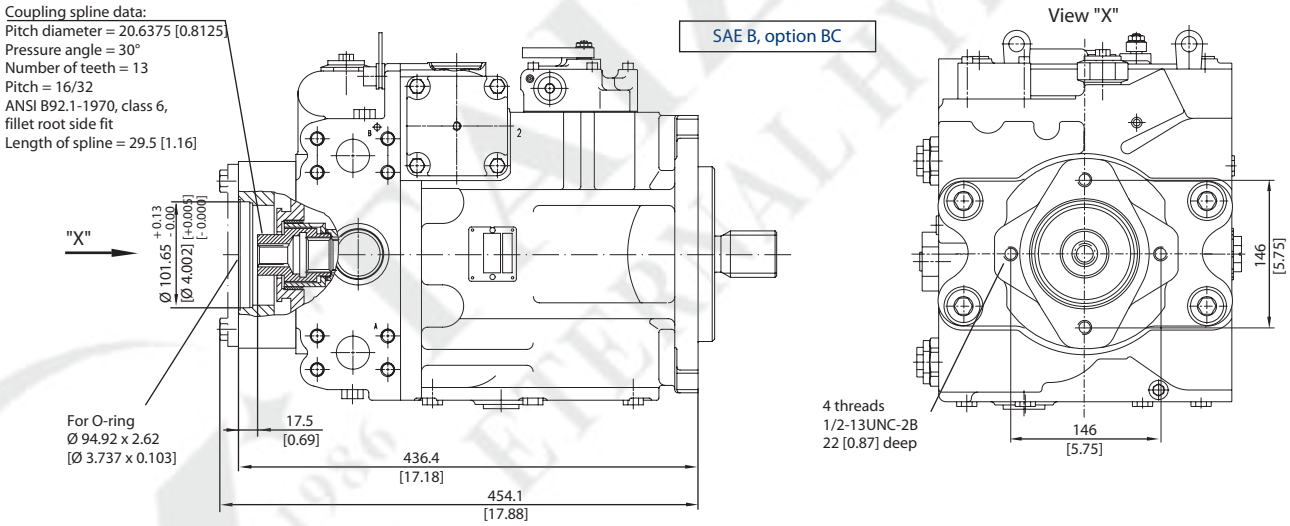

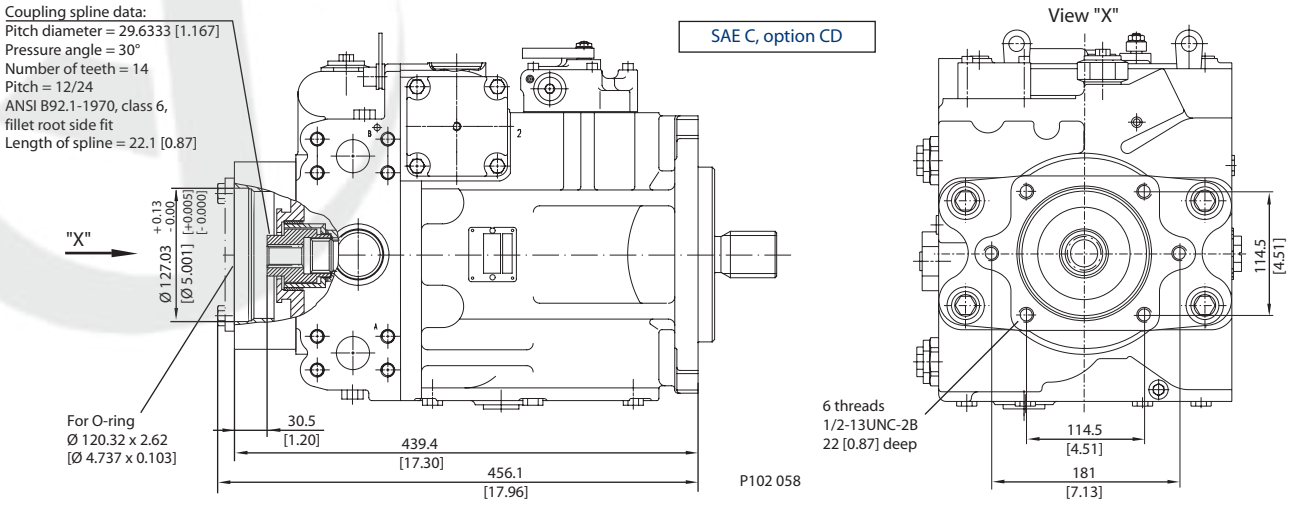

mm [in]

Frame Size 180 (continued)

Auxiliary mounting pad - options AB, BC, CD, DE, EF, EG, BB

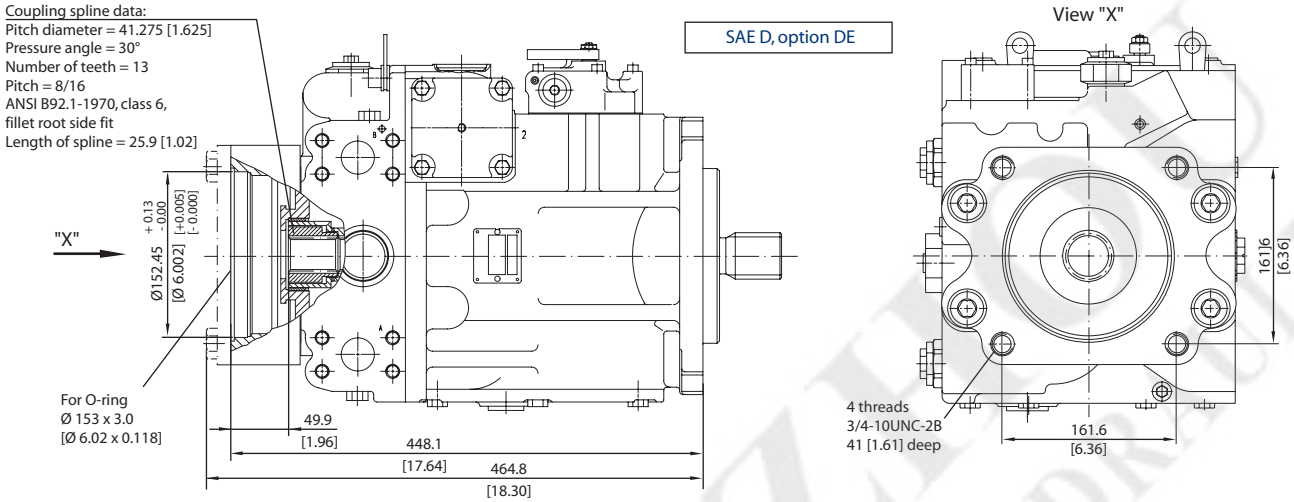

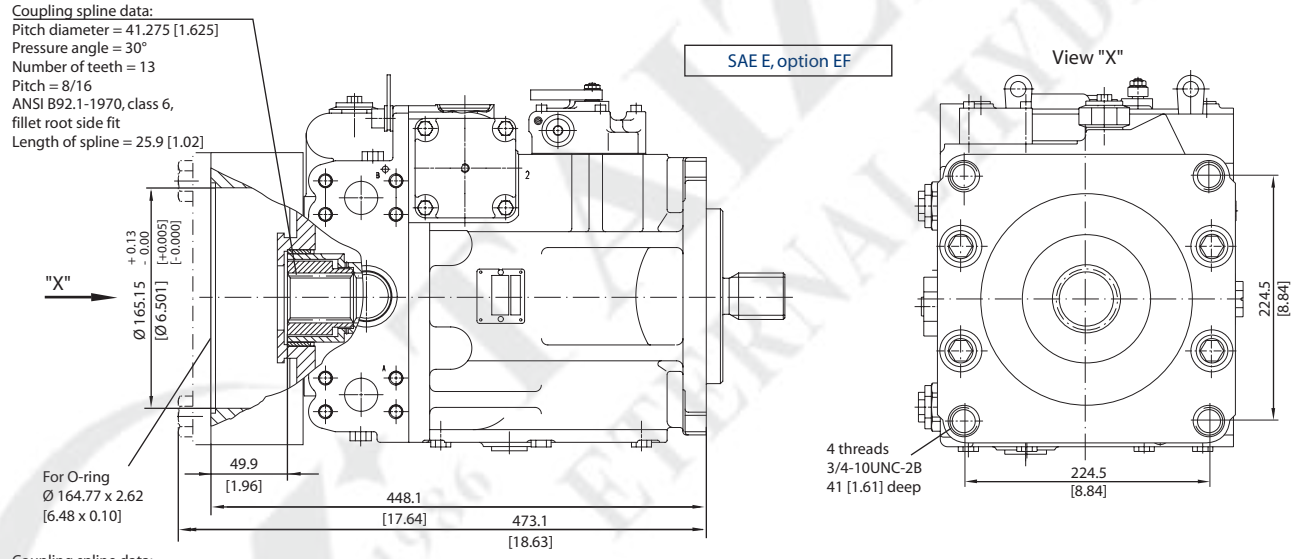

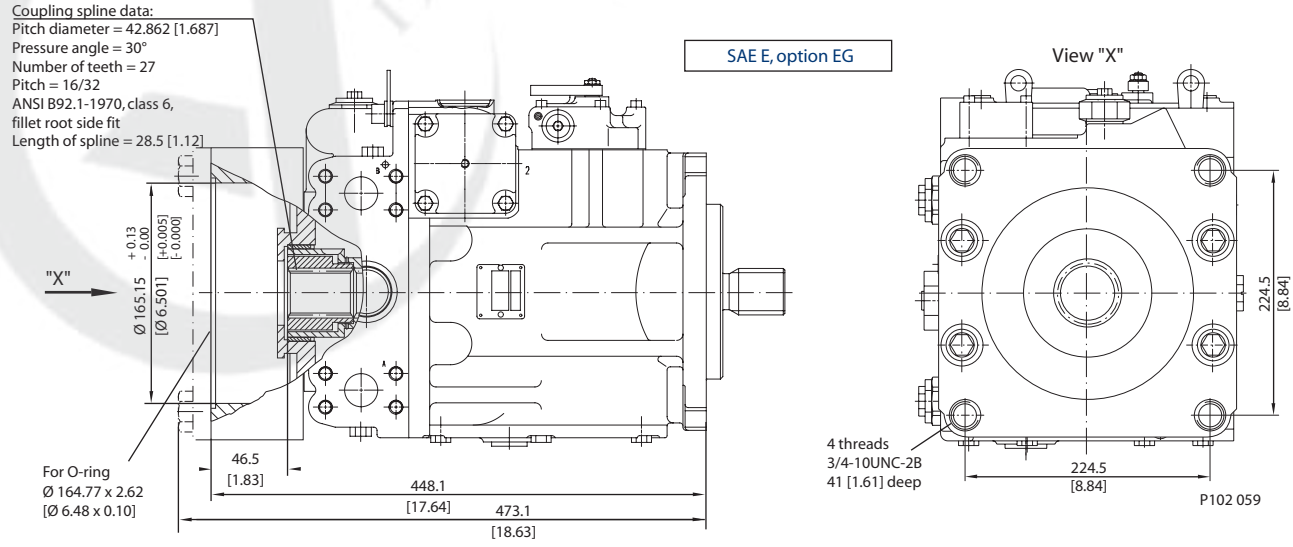

mm [in]

Frame Size 180 (continued)

Auxiliary mounting pad - options AB, BC, CD, DE, EF, EG, BB

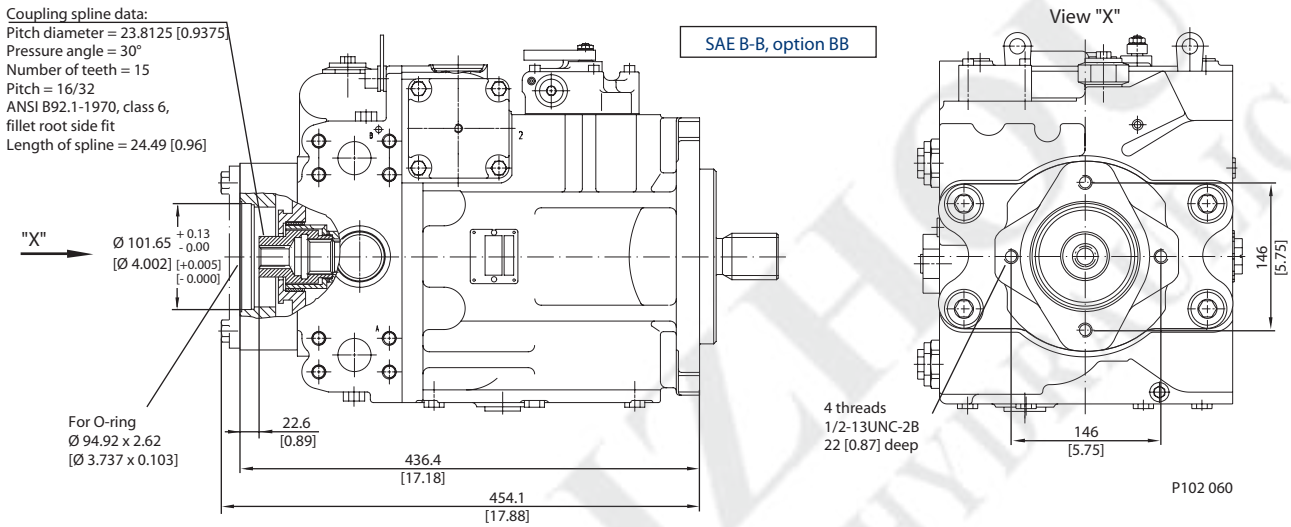

mm [in]

Frame Size 180 (continued)

Shaft dimensions

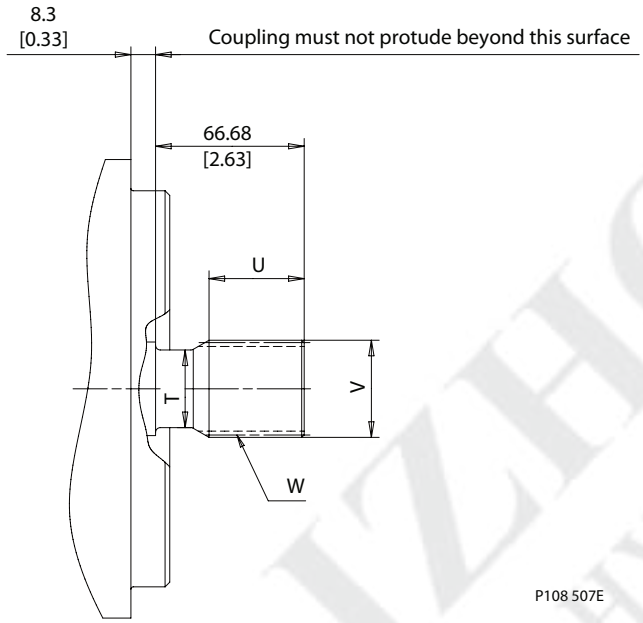

Shaft dimensions

	Undercut Diameter	Full Spline	Major Diameter	Pitch Diameter	Number of Teeth	Pitch	Pressure Angle	Spline	
Shaft Option	**T**	**U***	**V**	**W**					
C8	39 [1.54]	42.5 [1.67]	44.35 [1.75]	42.8625 [1.8450]	27	16/32	30 Degrees	ANSI B92.1	Side fit, Fillet Root
F1	34.04 [1.34]	42.5 [1.67]	43.94 [1.73]	41.275 [1.825]	13	8/16	30 Degrees	ANSI B92.1	Side fit, Fillet Root

* Minimum active spline length for the specified torque ratings

mm [in]

Frame Size 250

Manual Displacement Control (MDC), end cap twin ports, option 80

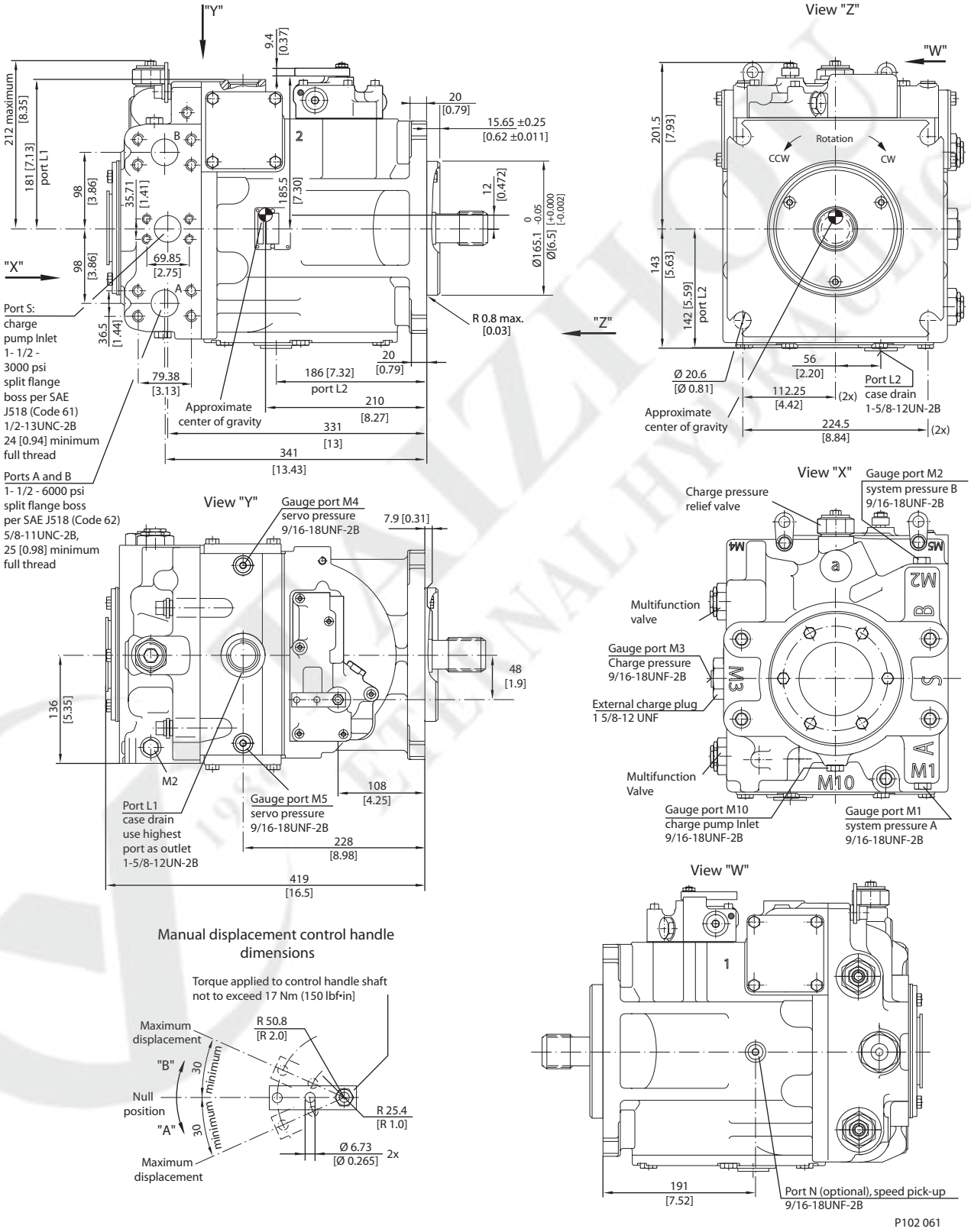

mm [in]

Frame Size 250 (continued)

Auxiliary mounting pad - options AB, BC, CD, DE, EF, EG, BB

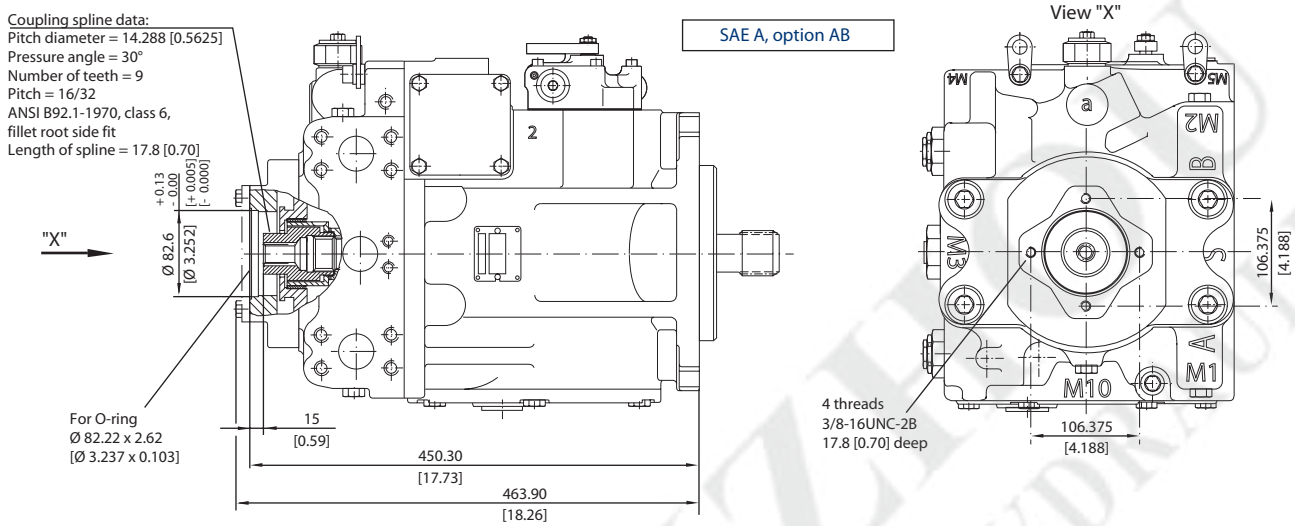

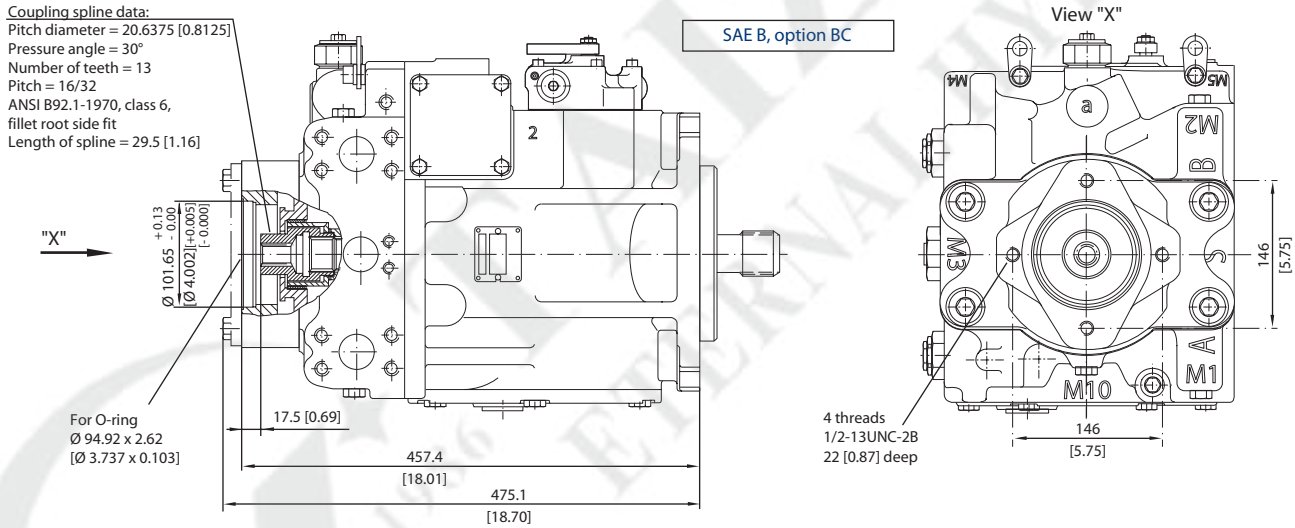

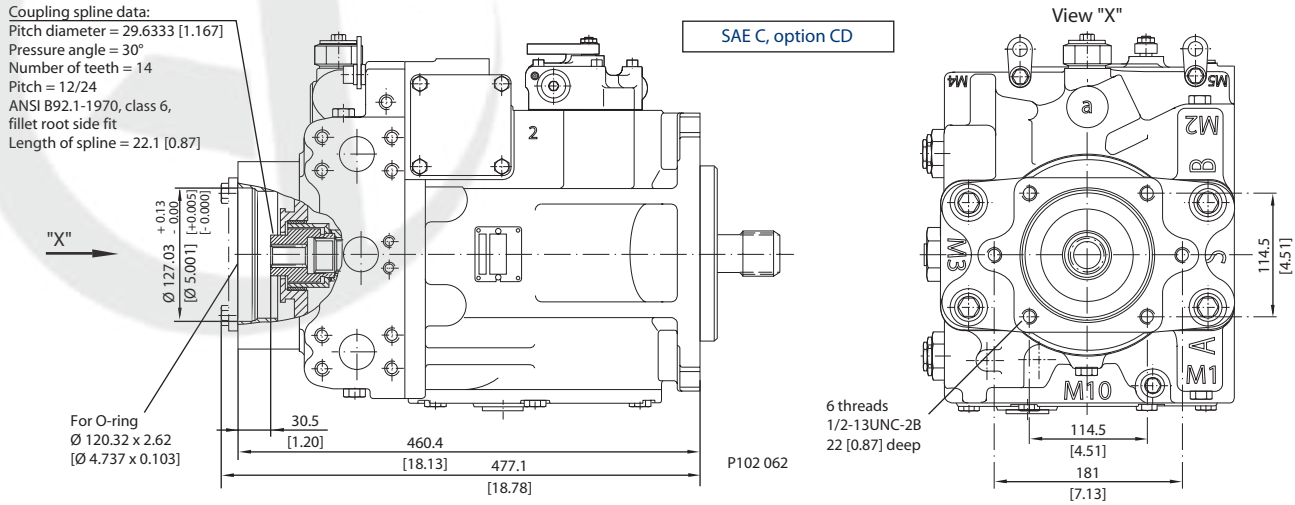

mm [in]

Frame Size 250 (continued)

Auxiliary mounting pad – options AB, BC, CD, DE EF, EG, BB

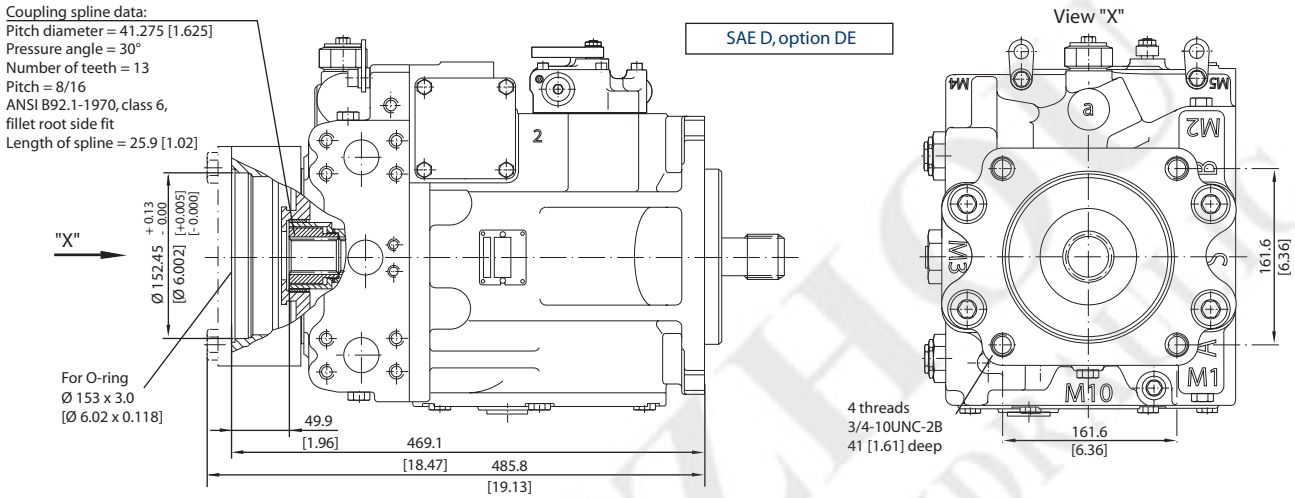

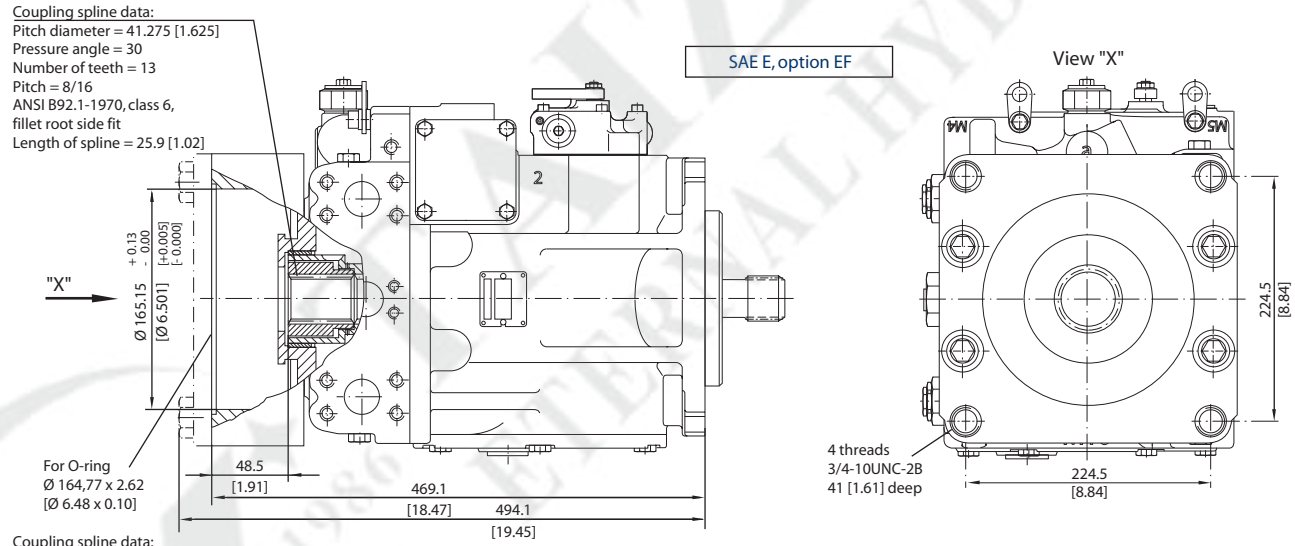

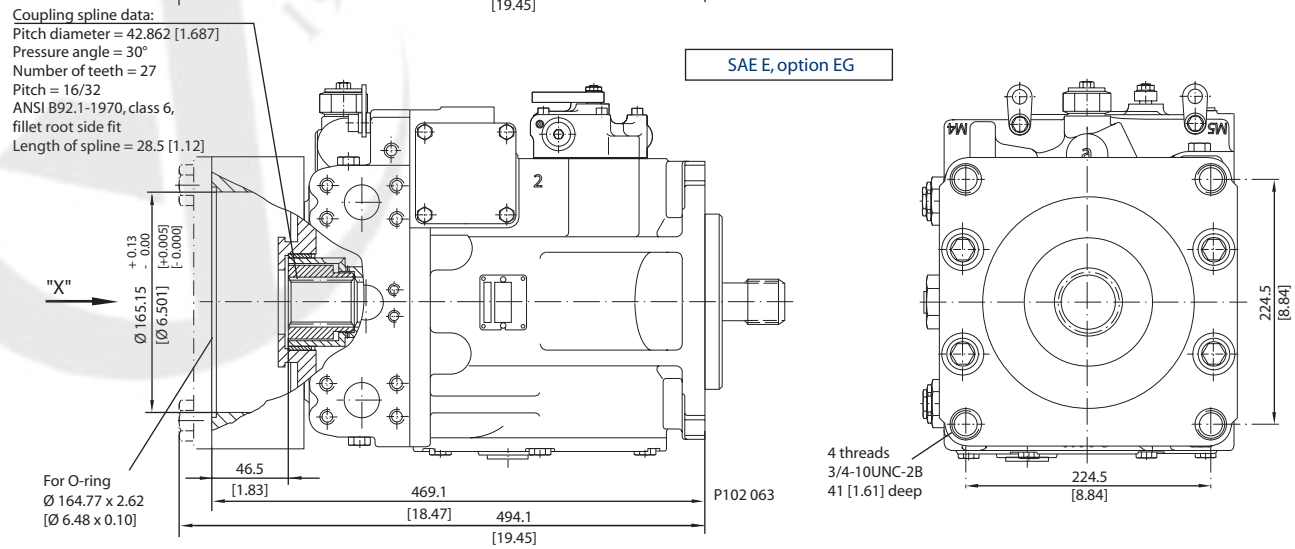

mm [in]

Frame Size 250 (continued)

Auxiliary mounting pad – options AB, BC, CD, DE, EF, EG, BB

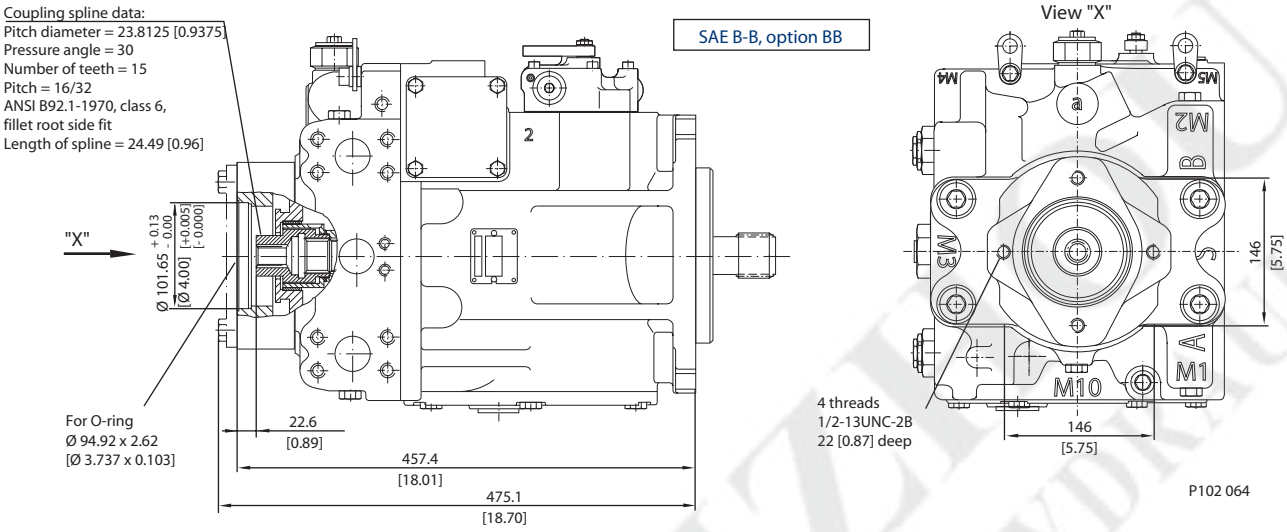

Shaft dimensions

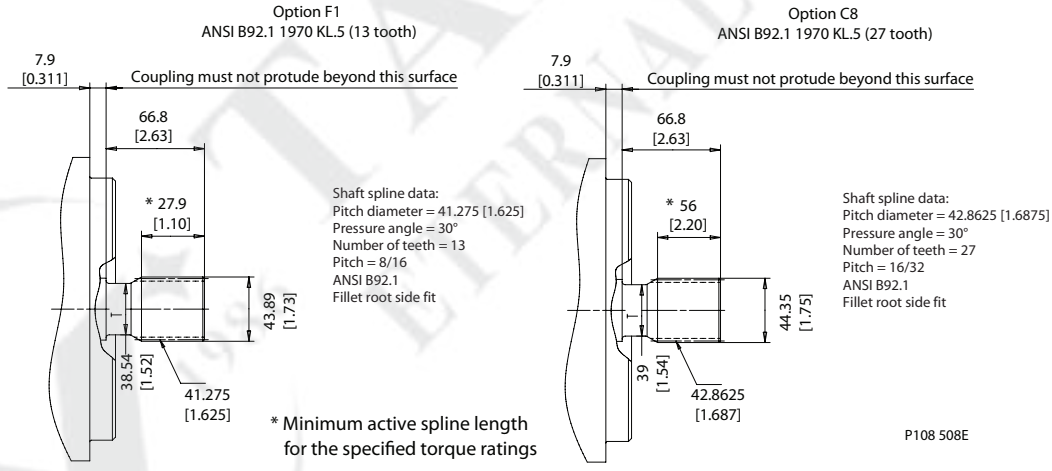

mm [in]

Cover Plate

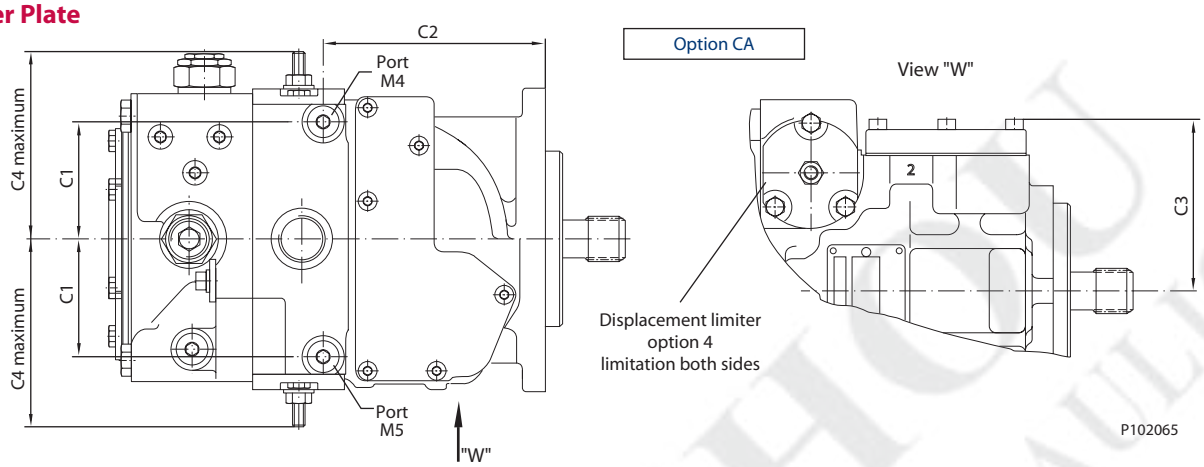

Dimensions

Frame size	C1	C2	C3	C4 maximum (option 4)
042	67.9 [2.67]	129.5 [5.10]	99.5 [3.92]	108 [4.25]
055	69.2 [2.72]	179.4 [7.06]	103.6 [4.08]	114 [4.48]
075	74.2 [2.92]	185.7 [7.31]	109.4 [4.31]	118 [4.65]
100	83.3 [3.28]	183.3 [7.22]	118.3 [4.66]	136 [5.35]
130	86.6 [3.41]	209.3 [8.24]	137.2 [5.40]	141 [5.55]
180	-	-	-	184 [7.24]
250	-	-	-	184 [7.24]

3-Position (F-N-R) Electric Control

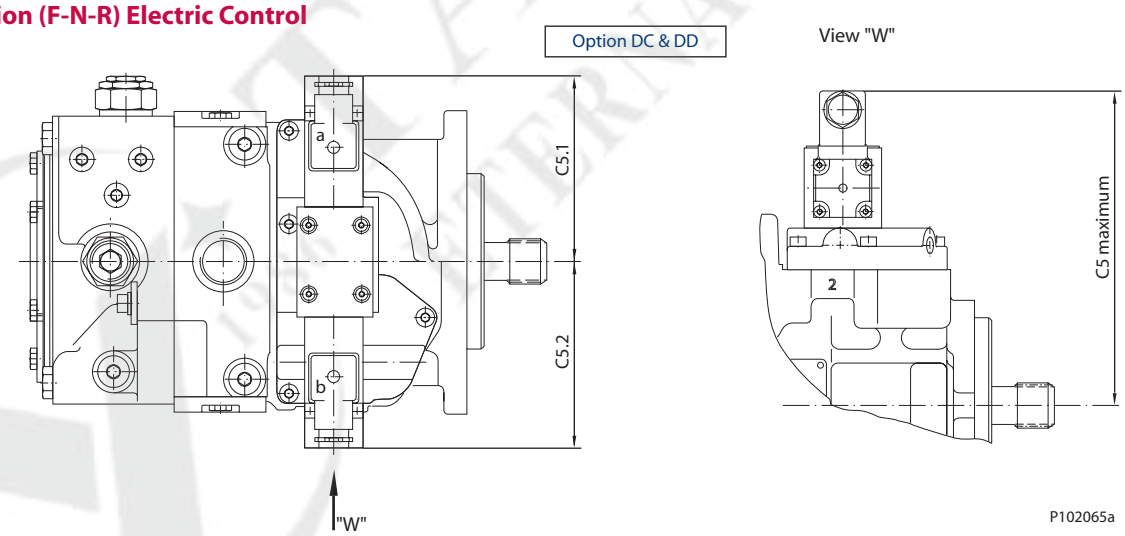

Dimensions

Frame size	C5 maximum	C5.1	C5.2
042	196.5 [7.74]	108.8 [4.28]	106.2 [4.18]
055	200.6 [7.90]	108.8 [4.28]	106.2 [4.18]
075	207.9 [8.19]	108.8 [4.28]	106.2 [4.18]
100	216.8 [8.54]	117.4 [4.62]	97.6 [3.84]
130	235.7 [9.28]	102.4 [4.03]	112.6 [4.43]
180	252.4 [9.94]	94.6 [7.32]	120.4 [4.74
250 [option DD only]	210.4 [8.28]	94.6 [7.32]	120.4 [4.74

mm [in]

Electric Displacement Control (EDC) with MS-Connector or Packard® connector

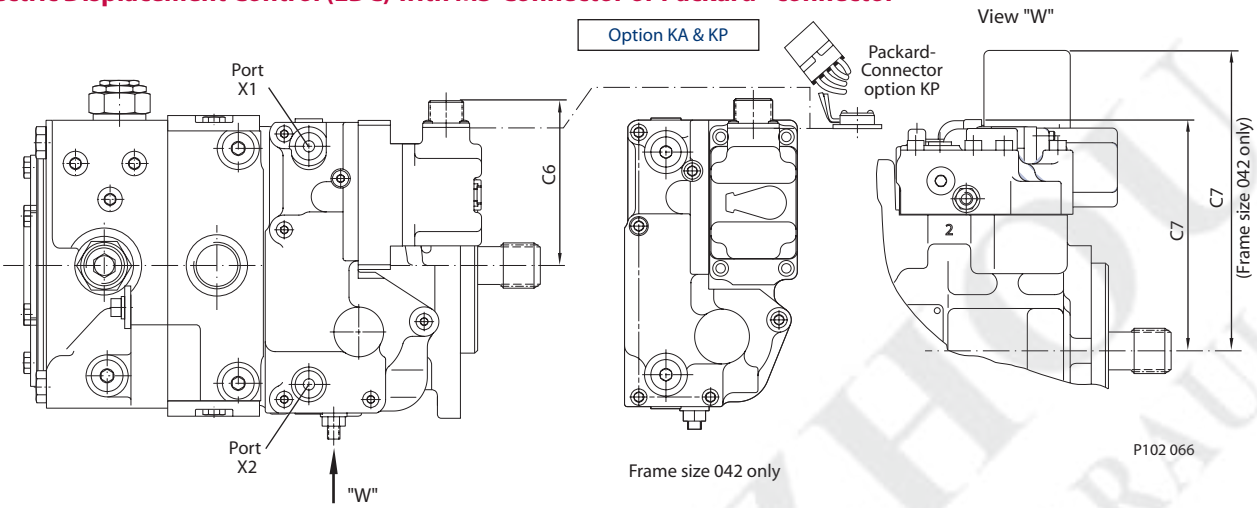

Dimensions

Frame size	C6	C7
042	95.3 [3.75]	168.6 [6.64]
055	95.3 [3.75]	141.2 [5.56]
075	105.2 [4.14]	144.8 [5.70]
100	114.0 [4.49]	153.7 [6.05]
130	99.1 [3.90]	172.7 [6.80]
180	93.4 [3.68]	190.0 [7.48]
250	93.4 [3.68]	226.2 [8.91]

Hydraulic Displacement Control (HDC)

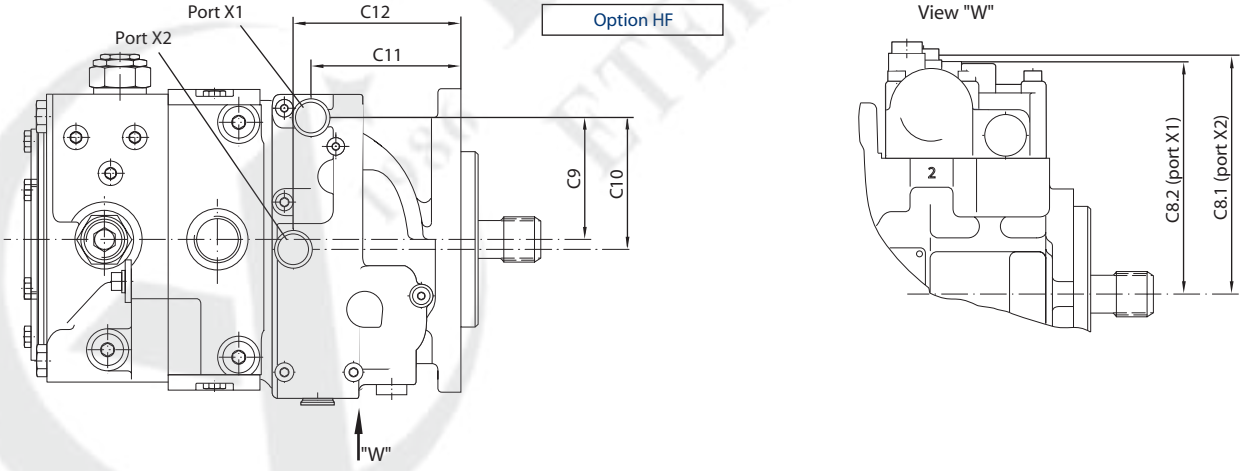

Dimensions

Frame size	C8.1	C8.2	C9	C10	C11	C12
042	143.5 [5.65]	135.0 [5.31]	71.0 [2.79]	75.7 [2.98]	89.6 [3.52]	99.2 [3.90]
055	150.8 [5.94]	139.0 [5.47]	71.0 [2.79]	75.7 [2.98]	105.6 [4.15]	115.2 [4.53]
075	148.9 [5.86]	139.0 [5.47]	68.2 [2.68]	67.0 [2.63]	121.8 [4.79]	125.3 [4.93]
100	158.0 [6.22]	149.0 [5.86]	76.8 [3.02]	67.0 [2.63]	127.9 [5.03]	131.4 [5.17]
130	176.7 [6.95]	167.7 [6.60]	61.8 [2.43]	67.0 [2.63]	142.1 [5.59]	145.6 [5.73]
180/250	194.0 [7.63]	185.0 [7.28]	54.0 [2.12]	67.0 [2.63]	148.6 [5.85]	152.1 [5.99]

mm [in]

Manual Displacement Control (MDC) with neutral start switch

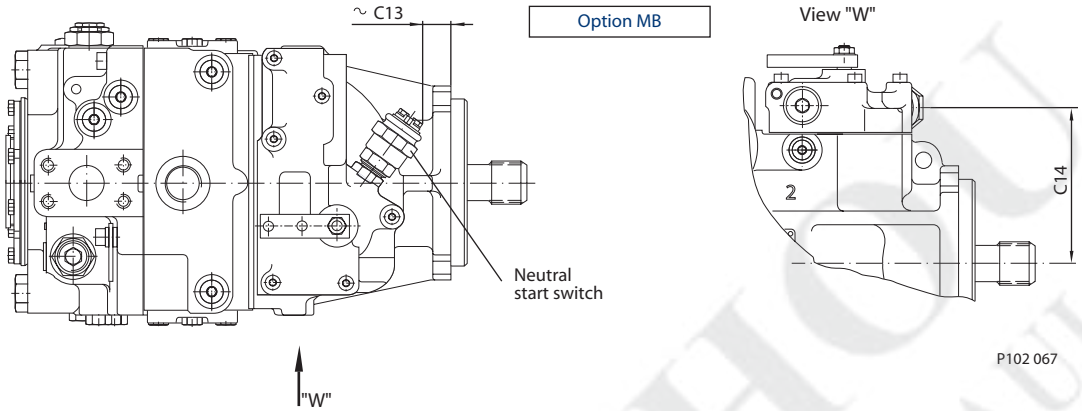

Dimensions

Frame size	C13	C14
042	0.35 [0.014]	96.0 [3.78]
055	18.0 [071]	100.0 [3.94]
075	25.0 [0.98]	106.9 [4.21]
100	31.3 [1.23]	115.8 [4.56]
130	46.0 [1.81]	134.5 [5.29]
180	52.0 [2.04]	151.8 [5.97]
250	52.0 [2.04]	151.8 [5.97]

Electrohydraulic Displacement Control (NFPE) (except 075 NFPE)

mm [in]

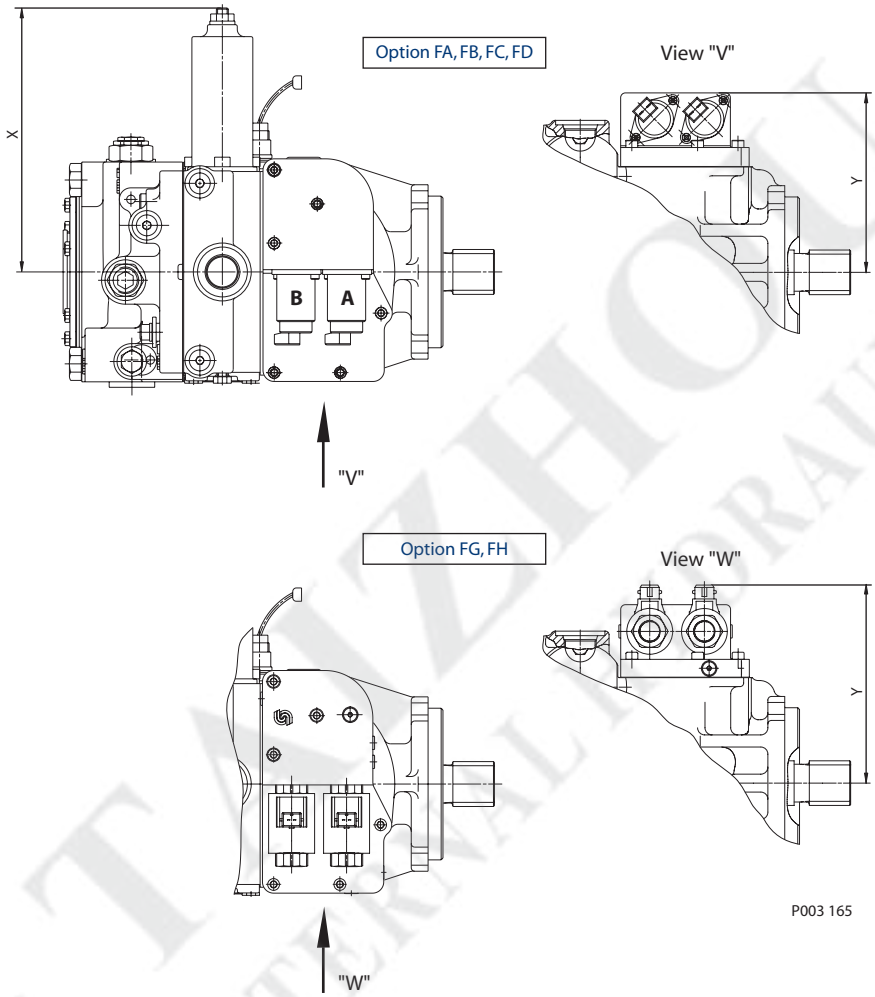

Dimensions

Frame Size	Option	"X"	"Y"
042	FA, FB, FC, FD	169.30 [6.67]	140.00 [5.51]
055	FA, FB, FC, FD	207.00 [8.15]	145.00 [5.71]
075	Special version see page 59		
100	FA, FB, FC, FD	235.00 [9.25]	161.10 [6.34]
100	FG, FH		176.60 [6.95]
130	FG, FH	244.10 [9.61]	195.50 [7.70]
180	FG, FH	290.00 [11.42]	213.00 [8.39]
250	—	—	—

mm [in]

Integral Pressure Filter

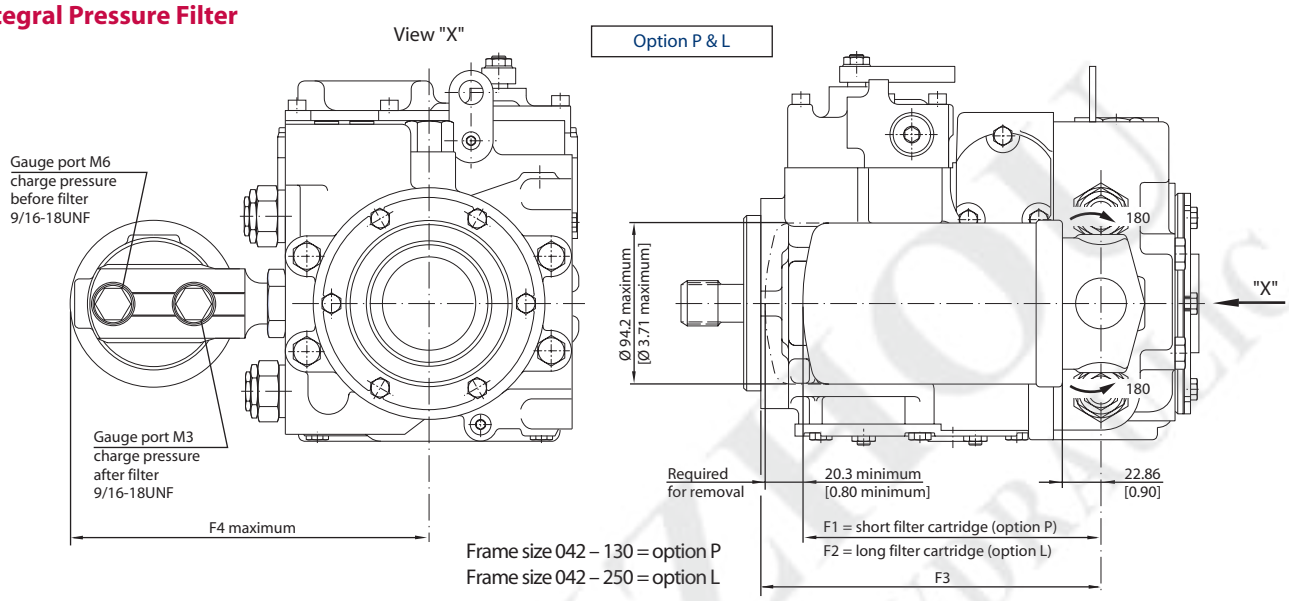

Remote pressure – without filter

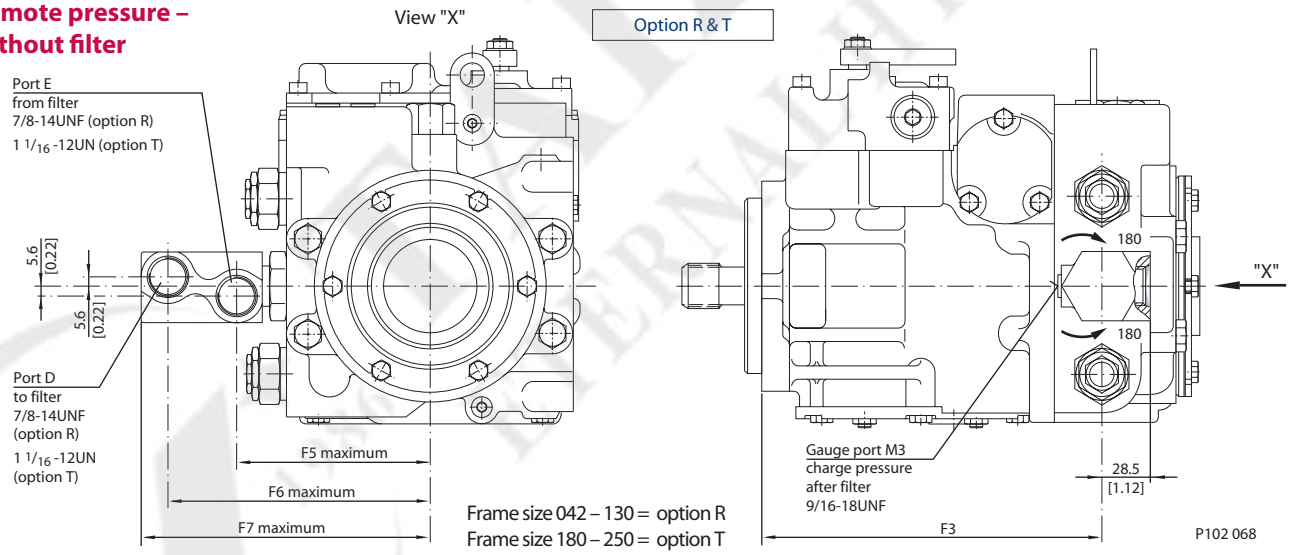

Dimensions

Frame size	F1	F2	F3	F4 maximum	F5 maximum	F6 maximum	F7 maximum
042	174.5 [6.87]	262.6 [10.34]	201.4 [7.93]	207.7 [8.12]	112.7 [4.44]	152.7 [6.01]	168.0 [6.61]
055	174.5 [6.87]	262.6 [10.34]	240.9 [8.19]	209.6 [8.25]	114.3 [4.50]	154.3 [6.07]	169.6 [6.68]
075	174.5 [6.87]	262.6 [10.34]	253.2 [9.67]	214.4 [8.44]	119.1 [4.69]	159.1 [6.26]	174.4 [6.86]
075 NFPE	174.5 [6.87]	262.4 [10.34]	253.7 [9.99]	214 [8.441]	119 [4.691]	159 [6.264]	174 [6.866]
100	174.5 [6.87]	262.6 [10.34]	280.7 [11.05]	223.0 [8.78]	127.7 [5.03]	167.7 [6.60]	183.0 [7.20]
130	174.5 [6.87]	262.6 [10.34]	299.9 [11.81]	223.0 [9.17]	137.7 [5.03]	177.7 [6.99]	193.0 [7.60]
180	-	-	327.8 [12.90]	-	182.0 [7.16]	236.8 [9.32]	259.2 [10.2]
250	-	-	342.8 [13.49]	-	182.0 [7.16]	236.8 [9.32]	259.2 [10.2]